Engine code	ADF	026.2			

Workshop Manual Volkswagen Industrial engine.

Carburettor engine (1.8 ltr engine)

Edition August 1995.

Service department.

Service.

List of Workshop Manual Repair Groups

Volkswagen, Industrial engine

Engine code	ADF	026.2								

Booklet **Carburettor engine (1.8 ltr engine)**
Edition August 1995

Repair Group	Technical Bulletins					
00 Technical Data						
10 Removing and installing engine						
13 Crankshaft group						
15 Cylinder head, Valve gear						
17 Lubrication						
19 Cooling						
20 Fuel supply system						
22 Mixture preparation, Carburettor						
27 Starter, Current supply						
28 Glow plug system						

Technical Information should always be available to all foremen and mechanics, because their compliance with the instructions given is essential to ensure vehicle roadworthiness and safety. In addition, the normal safety precautions to be observed when working on motor vehicles are also applicable.

This Workshop Manual is only intended for use within the Volkswagen and Audi organisation, passing on to third parties is not permitted.

© 1995 Volkswagen AG

Printed in Germany
000.9204.55.20

Contents

00 Technical data — Page

Technical data **00-1**
- Engine number 00-1
- Engine characteristics 00-2

10 Removing and installing engine — Page

Removing and installing engine **10-1**
- Instructions for removing 10-1
- Instructions for installing 10-1
- Tightening torques 10-2

13 Crankshaft group — Page

Dismantling and assembling engine **13-1**
- Removing, installing and tensioning toothed belt 13-11
- Adjusting alternator V- belt 13-15

Dismantling and assembling cylinder block, crankshaft and flywheel **13-17**
- Renewing crankshaft seal – pulley end 13-25
- Crankshaft dimensions 13-27
- Producing ignition timing marks on flywheel 13-28

Dismantling and assembling pistons and conrods **13-29**
- Piston and cylinder dimensions 13-35

15 Cylinder head, valve gear — Page

Removing and installing cylinder head **15-1**
- Removing and installing cylinder head 15-5
- Checking compression pressure 15-7

Servicing valve gear **15-8**
- Reworking valve seats 15-17
- Renewing seal for camshaft 15-20
- Removing and installing camshaft 15-22
- Checking hydraulic bucket tappets 15-24
- Checking valve guides 15-25
- Renewing valve guides 15-26
- Renewing valve stem seals 15-27
- Checking valve clearance 15-28

17 Lubrication — Page

- **Removing and installing parts of lubrication system** **17-1**
- Checking oil pressure and oil pressure switch 17-7

19 Cooling — Page

Removing and installing parts of cooling system **19-1**
- Cooling system parts – engine side 19-2
- Coolant hose connection diagram 19-5

20 Fuel supply system — Page

Removing and installing parts of fuel supply system **20-1**
- Rules for cleanliness 20-4
- Removing and installing fuel supply reservoir 20-6

22 Mixture preparation, Carburettor — Page

Mixture preparation system, 1B3 carburettor **22-1**
- Removing and installing carburettor and intake manifold 22-2
- Servicing carburettor 22-4
- Carburettor data and fittings 22-11
- Rules for cleanliness 22-12
- Adjusting idling speed 22-15
- Checking and adjusting cold idling speed 22-17

- Checking pull-down unit operation 22-18
- Checking and adjusting pull-down unit 22-18
- Throttle valve basic setting 22-20
- Checking part load channel heating 22-22
- Checking and adjusting quantity injected by accelerator pump 22-23
- Vacuum hose connections 22-25

Electronic speed regulator 22-26
- Removing and installing electronic speed regulator 22-27
- Checking and adjusting lift magnet rods 22-29
- Checking lift magnet 22-29
- Adjusting MIN. and MAX. regulated speeds, without load 22-30
- Servicing 34 PICT–5 carburettor 22-32
- Carburettor data and fittings 22-37
- Rules for cleanliness 22-38
- Adjusting accelerator pump 22-39
- Adjusting idling speed 22-39
- Checking and adjusting cold idling speed 22-41
- Checking pull-down unit operation 22-42
- Checking and adjusting pull-down unit 22-42
- Throttle valve basic setting 22-43
- Vacuum hose connections 22-46
- Adjusting electronic speed regulator 22-48
- Removing, installing and adjusting impulse sender 22-50
- Impulse sender assembly plan 22-52
- Current flow diagram 22-53

27 Starter, Current supply — **Page**

Checking alternator and ballast resistance 27-1
- Checking with digital multimeter V.A.G 1315A 27-1
- Checking with ballast resistance 27-2

Checking starter 27-5
- Starter does not turn 27-5
- Starter turns too slowly and does not crank engine 27-6

28 Ignition system — **Page**

Servicing TCI–H ignition system 28-1
- Safety measures 28-7
- Adjusting data, Spark plugs 28-8
- Distributor data 28-10
- Installing distributor 28-11
- Checking and adjusting ignition timing 28-13
- Checking ignition timing setting 28-14
- Checking TCI–H switch unit 28-19
- Checking Hall sender 28-22
- Checking speed regulator 28-22

Technical Data

Engine Number

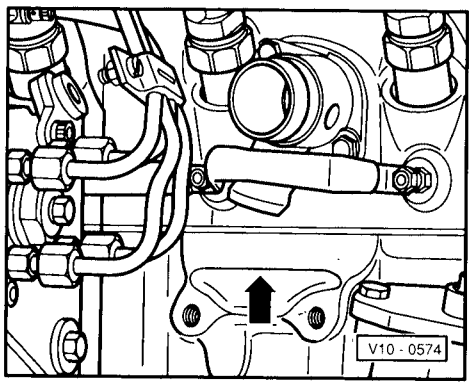

◄ The engine number (engine code and "serial number") is stamped on the left-hand side of the cylinder block - arrow -.

Engine Data

Engine code		026.2	ADF
Manufactured		06.83...02.94	03.94 ➢
Displacement	ltrs	1.8	1.8
Output [1]	kW at rpm	50/4000	50/4000
Bore	Ø mm	81	81
Stroke	mm	86.4	86.4
Compression ratio		9:1	9:1
RON	min.	91	91
Firing order		1-3-4-2	1-3-4-2

[1] Engine output varies according to the use to which the engine is to be put and the electronic governor setting.

Removing and installing engine

Note:

The following section contains only general instructions for the removal and installation of industrial engines, since, due to the different installation methods, no working sequence, which is generally applicable, can be given.

Instructions for removing

- With ignition turned off disconnect battery earth strap.
- Remove cap from expansion tank or radiator and drain coolant into a suitable container.
- Disconnect electrical wiring.
- Disconnect Bowden cables, such as clutch cable and accelerator cable.
- Detach fuel supply and return pipes.

Instructions for installing

- Reconnect electrical wiring.
- If the fuel pipes have been detached at the T-piece ensure that the return pipe is connected to the connection with the reducer.

- Align engine mountings stress free by rocking engine.
- Filling with coolant ⇒ Page 19-6.
- Adjust clutch free play if necessary.

Tightening torques

Bolted connections		Tightening torque
Engine mounting to engine carrier	M10	35 Nm
	M12	55 Nm
Front exhaust pipe to manifold		30 Nm
Engine/gearbox securing bolts	M12	55 Nm

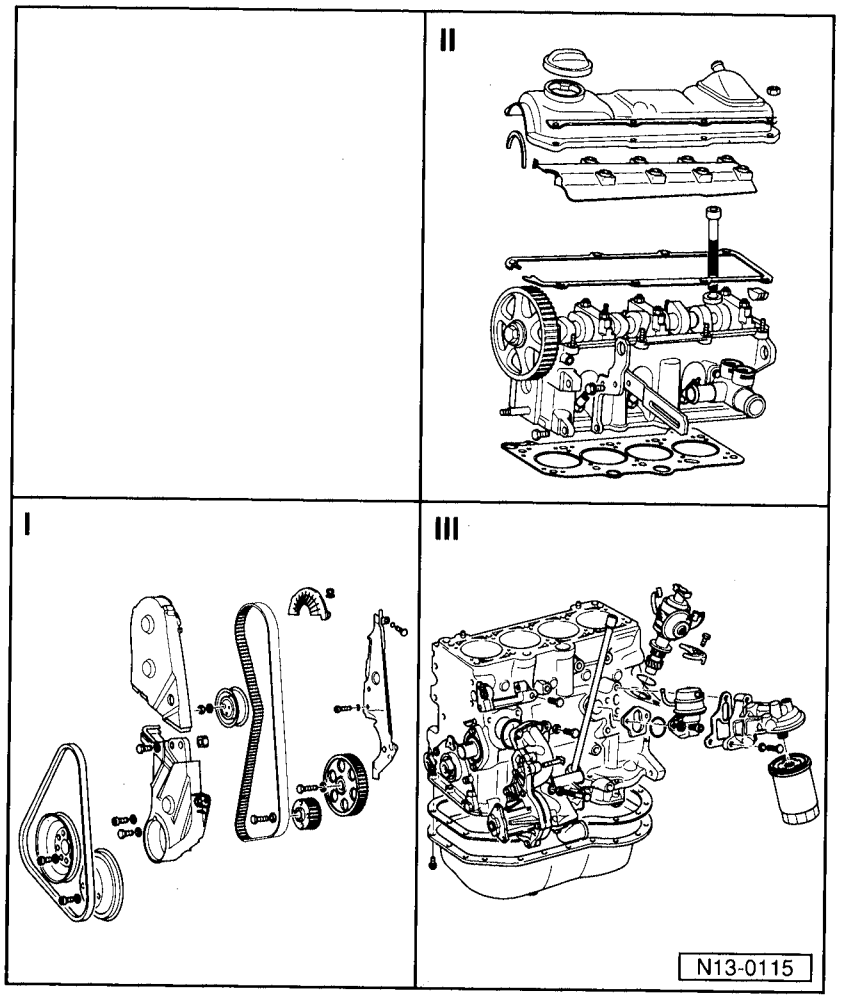

Dismantling and assembling engine

Note:

- *If, when repairing an engine, a large quantity of swarf or fine metal particles as caused e.g. by seizure of crankshaft and conrod bearings is found in the engine oil, the oil drillings must be thoroughly cleaned and the oil cooler replaced to prevent subsequent damage.*

I ⇒ Page 13-2

II ⇒ Page 13-6

III ⇒Page 13-9

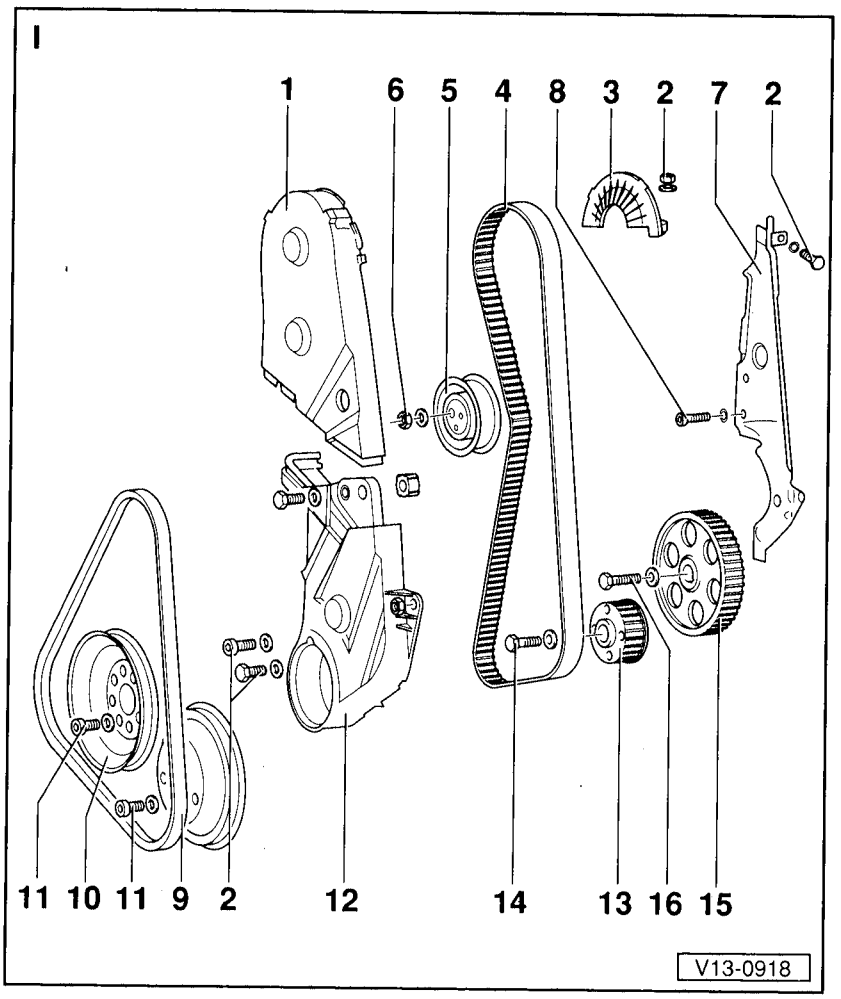

Part I

1 - Upper toothed belt guard
- 04.88➢ as illustrated
  ➢03.88 metal version.

2 - 10 Nm

3 - Toothed belt guard
- Only with plastic upper toothed belt guard

4 - Toothed belt
- Mark direction of rotation before removing
- Check for wear
- Do not kink
- Removing, installing and tensioning ⇒ Page 13-11

5 - Tensioning roller

6 - 45 Nm

7 - Rear toothed belt guard

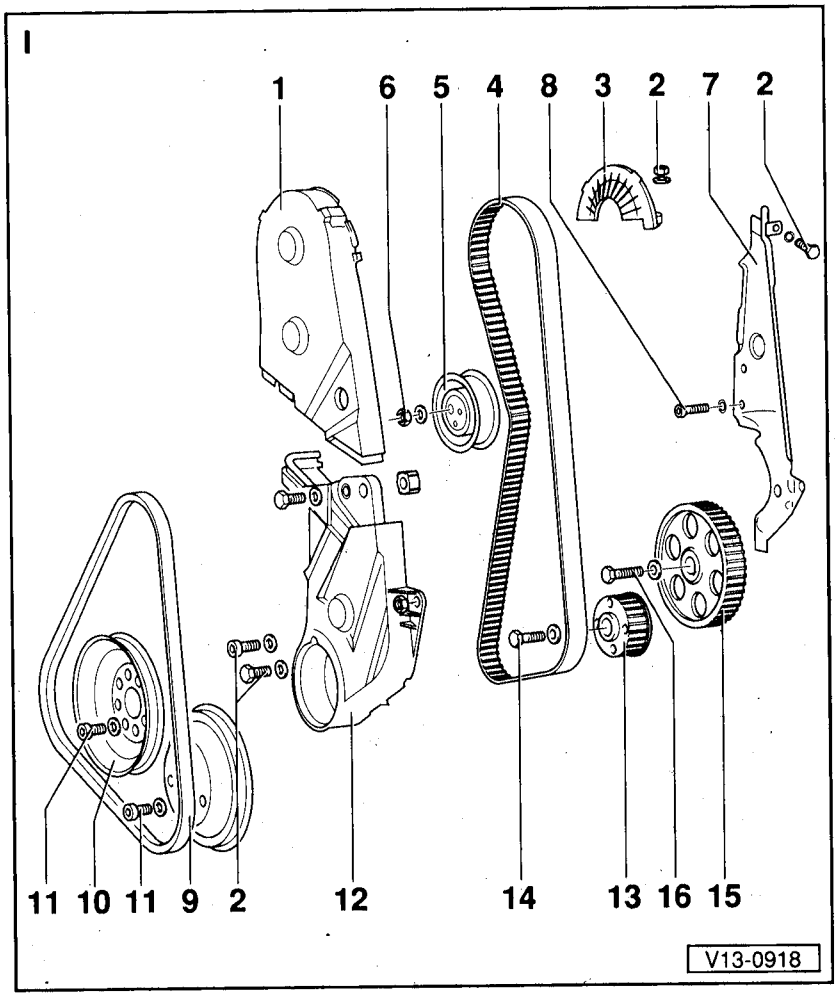

8 - 20 Nm

- 30 Nm for metal version toothed belt guard
- For metal version toothed belt guard additionally secure hexagon socket head bolt with D6 and tighten to 30 Nm

9 - Alternator V-belt

- Check tension with thumb pressure
  max. deflection:
  new belt approx. 2 mm
  used belt approx. 5 mm

New V-belts over 1000 mm long

- max. deflection:
  new belt approx. 10 mm
  used belt approx. 15 mm
- Adjusting toothed arm tensioning device ⇒ Page 13-15

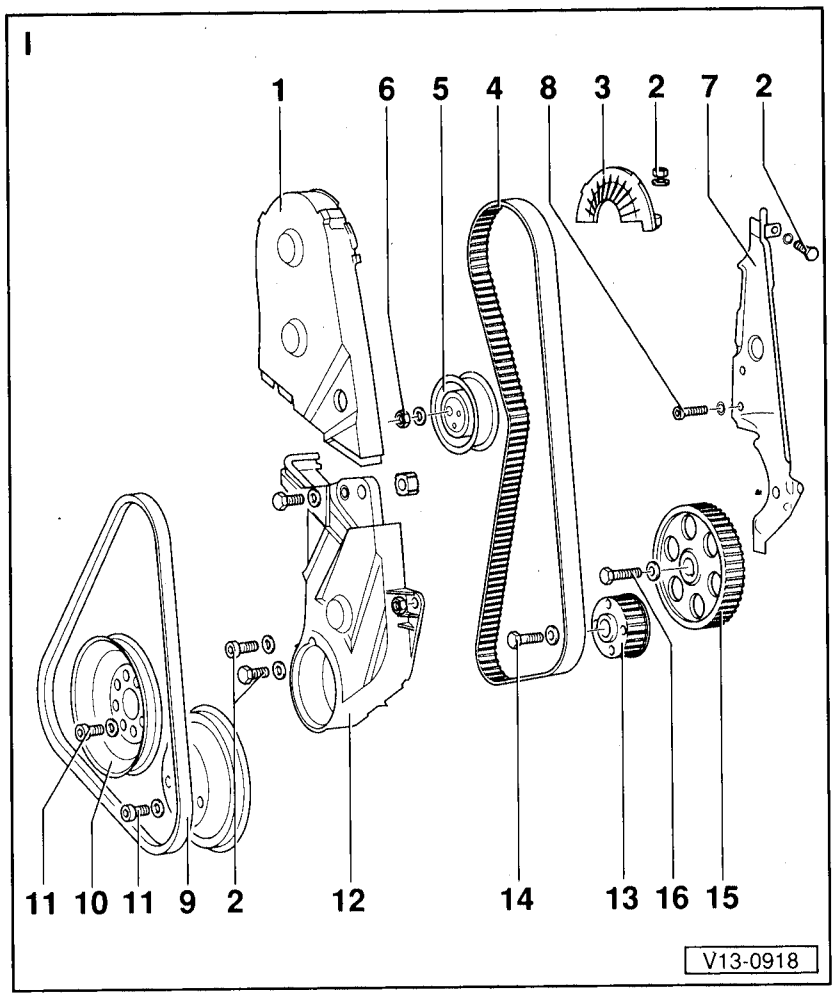

10 - Belt pulley

- When assembling note fixture
- Double V-belt for additional power take-off
- Observe position when installing
- Removing, installing and tensioning ⇒ Page 13-11

11 - 20 Nm

12 - Lower toothed belt guard

13 - Crankshaft toothed belt sprocket

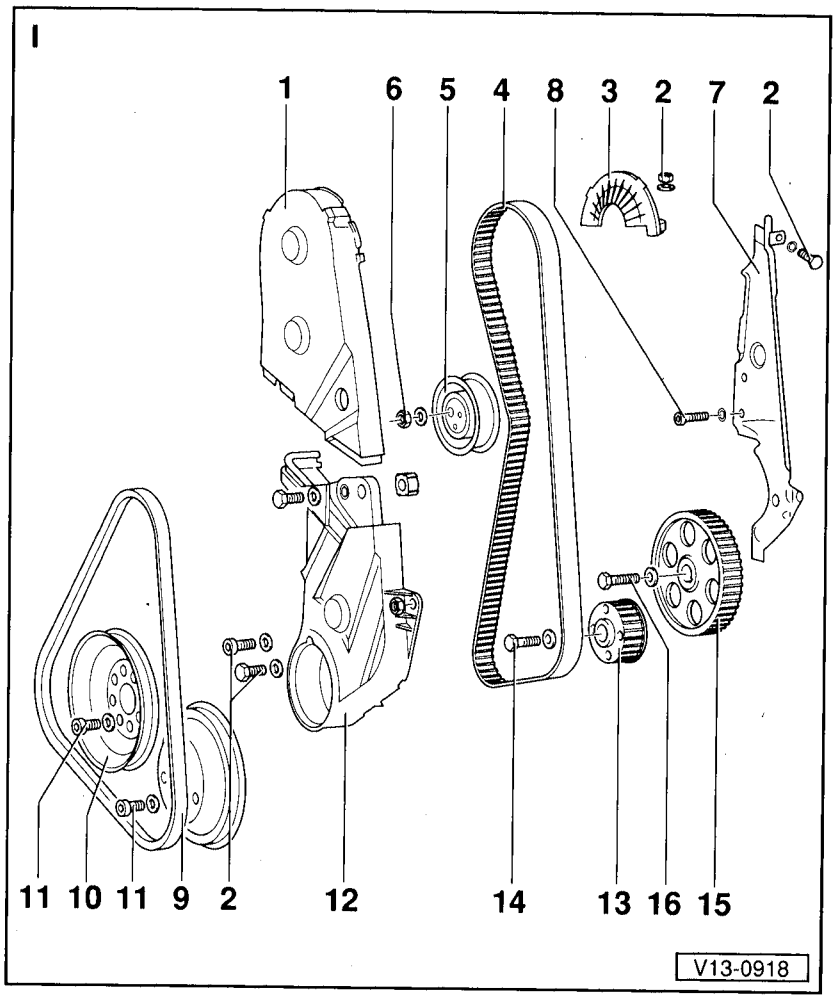

14 - Hexagon bolt, 180 Nm
- Use with washer
- Insert oiled
- To loosen and tighten, counter hold with 3099

Twelve point bolt, 90 Nm + ¼ turn (90°) further
- Renew
- Do not use with washer
- Oil threads and collar surface
- To loosen and tighten, counter hold with 3099
- Turning further can be done in several stages

15 - Intermediate shaft pulley
- Note position when installing toothed belt
- Removing, installing and tensioning ⇒ Page 13-11

16 - 80 Nm

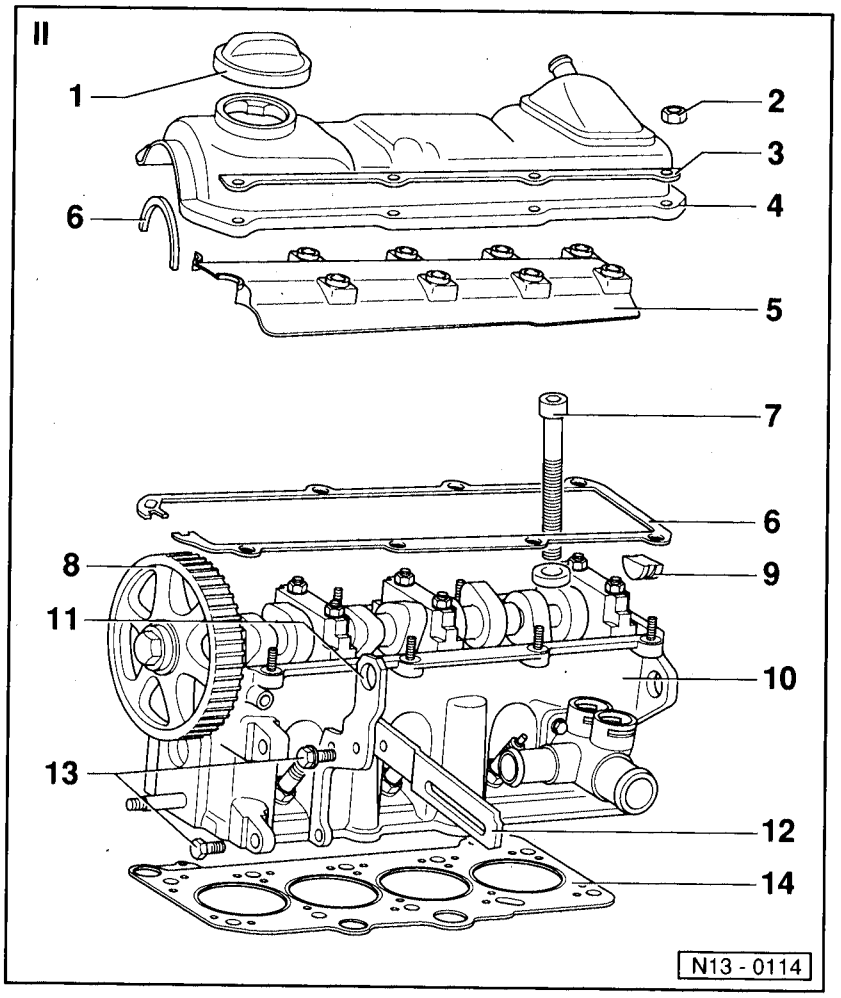

Part II

1 - Cover cap
- Renew seal if damaged

2 - 10 Nm

3 - Reinforcing strip

4 - Cylinder head cover

5 - Oil deflector
- Only with hydraulic bucket tappets

6 - Cylinder head cover gasket
- Renew

7 - Cylinder head bolt
- Observe sequence when loosening and tightening
- Removing and installing cylinder head ⇒ Page 15-5

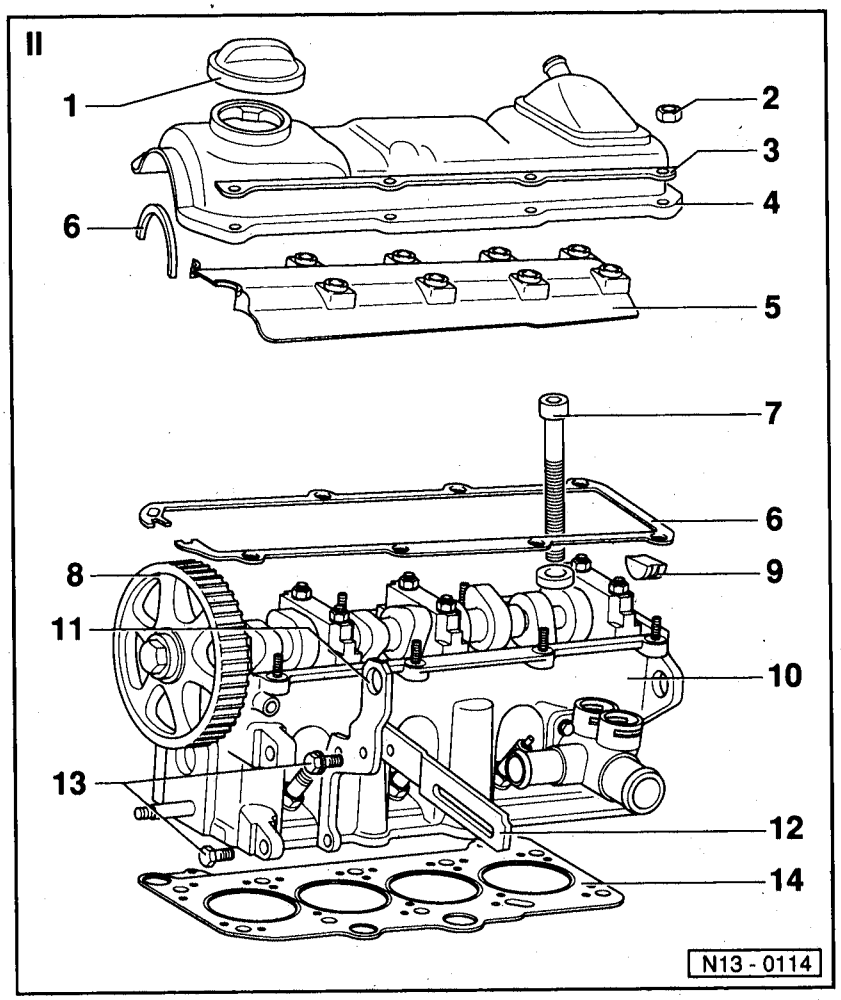

8 - Camshaft sprocket
- Note position when installing toothed belt ⇒ Page 13-11 removing, installing and tensioning toothed belt

9 - Sealing plug
- Renew

10 - Cylinder head
- Removing and installing ⇒ Page 15-1
- After renewing always renew complete coolant

11 - Lifting eye

12 - Tension arm
- For alternator
- 04.85➢ with teeth to adjust V-belt tension ⇒ Page 13-15

13 - 25 Nm

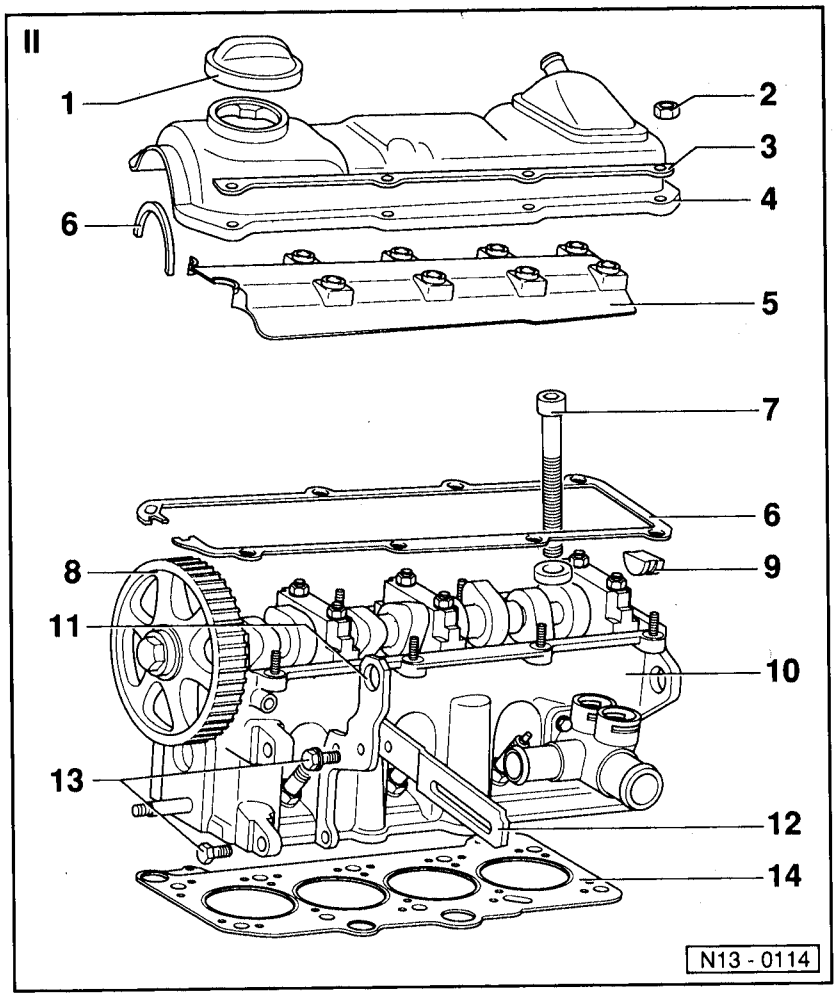

14 - Cylinder head gasket
- Renew
- When installing observe centralising pins in cylinder block
- Marking "oben" (up) faces cylinder head
- After renewing always renew complete coolant

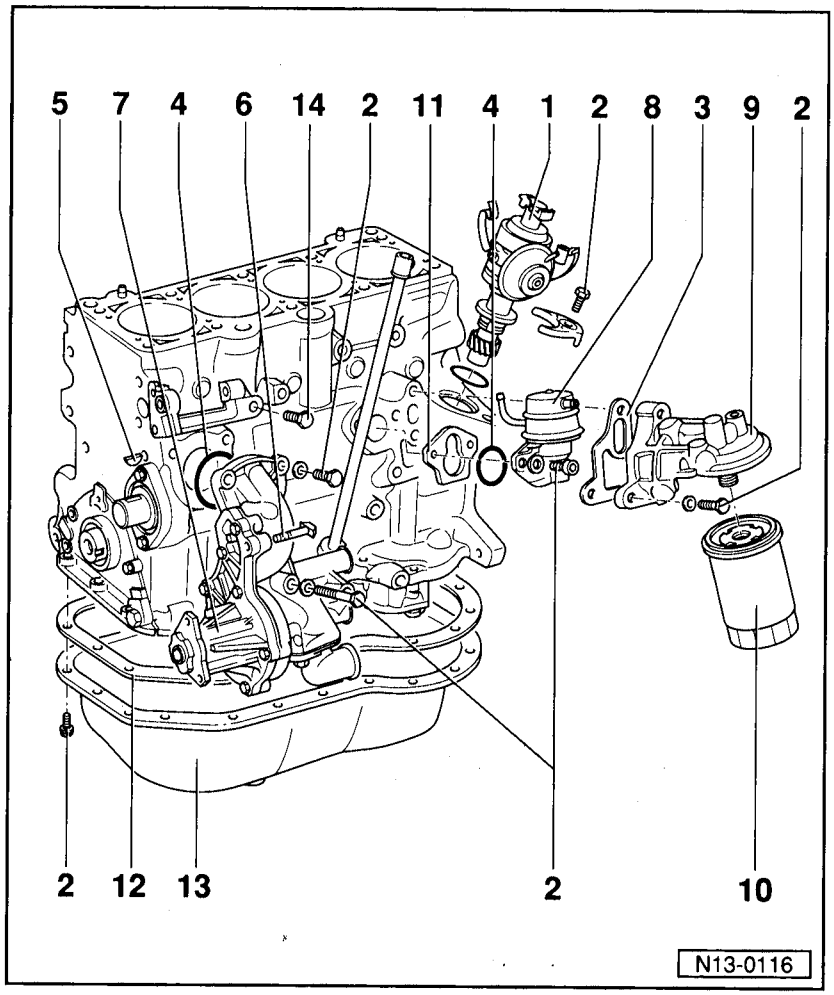

Part III

1 - Distributor
- With Hall sender
  ⇒ Page 28-1
- Installing
  ⇒ Page 28-11

2 - 20 Nm
- Loosen and tighten sump securing bolts at flywheel end with 3185

3 - Gasket
- Renew

4 - O-ring
- Renew if damaged

5 - Woodruff key
- Ensure seated securely

6 - Hammer head bolt

7 - Coolant pump
- Check that shaft rotates easily

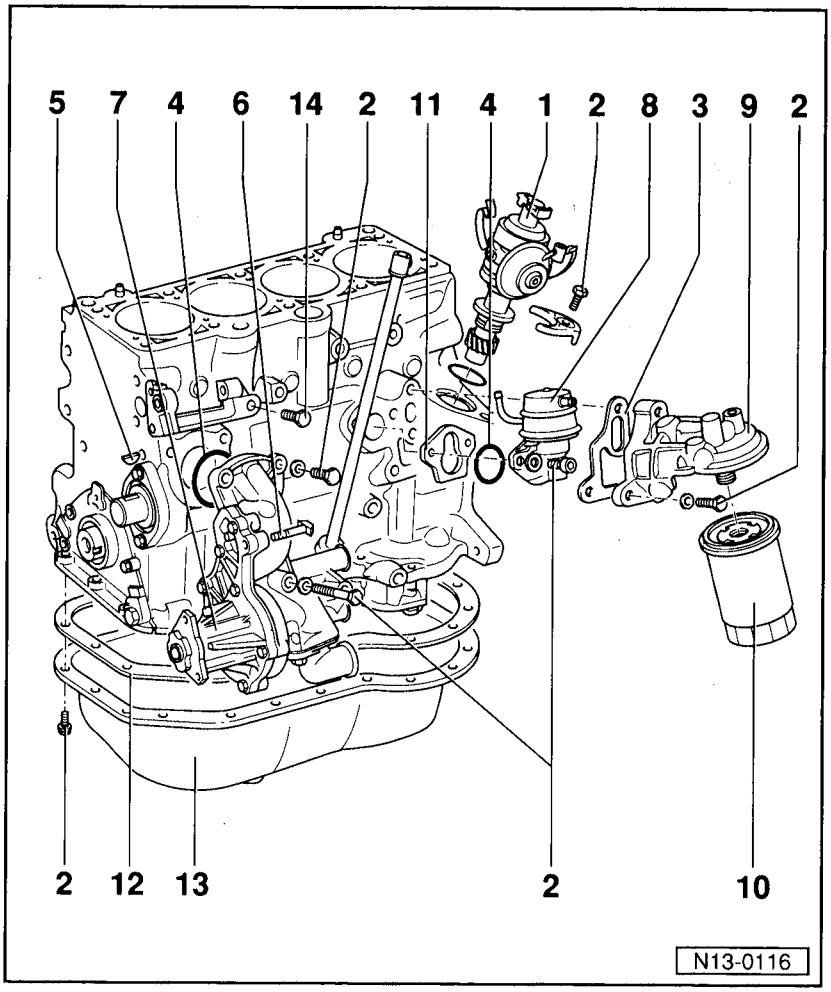

8 - Fuel pump

9 - Oil filter bracket

10 - Oil filter
- Loosen with strap wrench
- Tighten by hand
- Observe installation instructions on oil filter

11 - Intermediate flange

12 - Sump gasket
- Renew
- Do not stick
- Ensure positioned correctly

13 - Sump
- Clean sealing surface before installing

14 - 35 Nm

Removing, installing and tensioning toothed belt

(Adjusting timing)

Observe notes ⇒ Page 13-11.

Removing

- Remove V-belts, pulleys and upper and lower toothed belt guards
- Mark toothed belt direction of rotation.
- Loosen tensioning roller and remove toothed belt.

Installing

Note:

- *When turning the camshaft the crankshaft must not be at TDC. Otherwise damage may be caused to valves/piston crown.*
- *For repairs that require the toothed belt only to be taken off the camshaft sprocket, adjust toothed belt as described on page 13-14.*

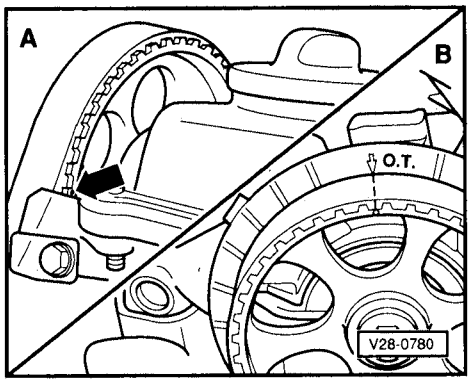

Toothed belt removed

- Fit toothed belt to crankshaft and intermediate shaft sprockets (observe direction of rotation).
- Secure V-belt pulley with one bolt (note fixture).
- ◄ Align marking on camshaft sprocket with marking on cylinder head cover -A- (arrow) or toothed belt guard -B-.

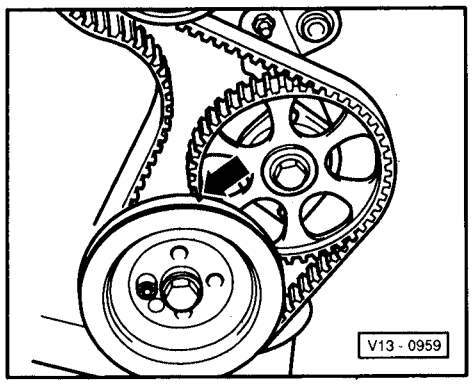

- ◄ Align marking on V- belt pulley with marking on intermediate shaft sprocket (TDC No. 1 cylinder).
- Fit toothed belt on camshaft sprocket.

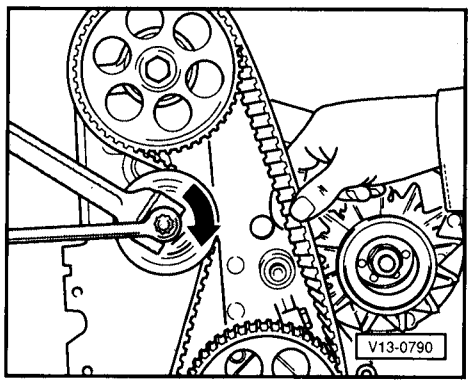

- Tension toothed belt, do this by turning to tensioning roller with pin wrench (e.g. Matra V 159) in direction of arrow.

Toothed belt must be able to be turned through 90° using thumb and fore finger at the centre point between camshaft and intermediate shaft sprockets.

- Tighten locking nut on tensioning roller.
  Tightening torque: 45 Nm
- Turn crankshaft two full turns and check setting.
- Remove belt pulley.
- Install lower toothed belt guard.
- Install belt pulley
- Install upper toothed belt guard and V-belt.
- Check ignition timing and adjust if necessary
  ⇒ Page 28-13.

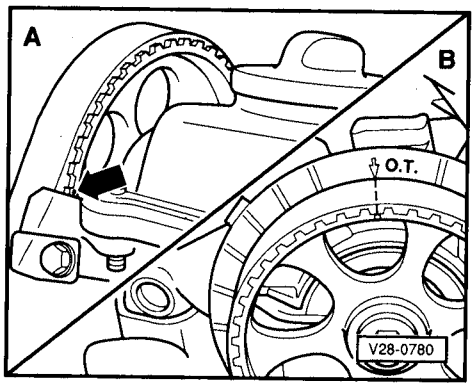

Toothed belt removed from camshaft sprocket

- Align marking on camshaft sprocket with marking on cylinder head cover -A- (arrow) or toothed belt guard -B-.
- Fit toothed belt on camshaft sprocket and tension.

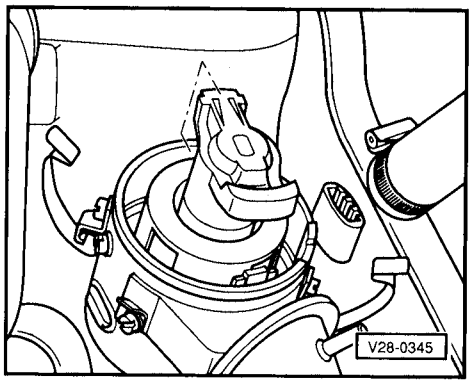

- Check if rotor arm points to No. 1 cylinder marking on distributor housing. If this is not the case, turn distributor until markings align. Remove and reinstall distributor if necessary.
- Turn crankshaft two full turns and check if camshaft and crankshaft marks align with there setting marks.
- Check ignition timing and adjust if necessary
  ⇒ Page 28-13.

Adjusting alternator V-belt tension

(Only for toothed arm tensioning device)

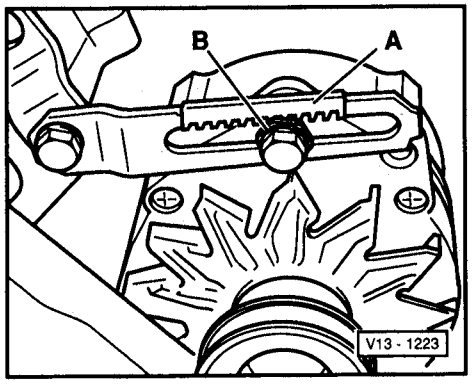

◄ – Loosen all tensioning arm -A- and alternator securing bolts at least one full turn.

Note:

The alternator must be able to be moved easily by hand.

– Tension V-belt by turning tensioning nut -B- with a torque wrench
  Specification: 8...10 Nm
  and then tighten tensioning nut securing bolt to
  35 Nm.

– Tighten alternator to mounting securing bolts to
  35 Nm
  and tensioning arm to cylinder head lifting eye to
  25 Nm.

– Start engine and run at idling speed for approx. 5 minutes.

– Switch ignition off.

– Loosen securing screws again and tension V-belt again to 8 Nm.

Note:

The torque wrench V.A.G 1410 in conjunction with a 22 mm AF ring socket insert -V.A.G 1410/2- is especially suited for adjusting.

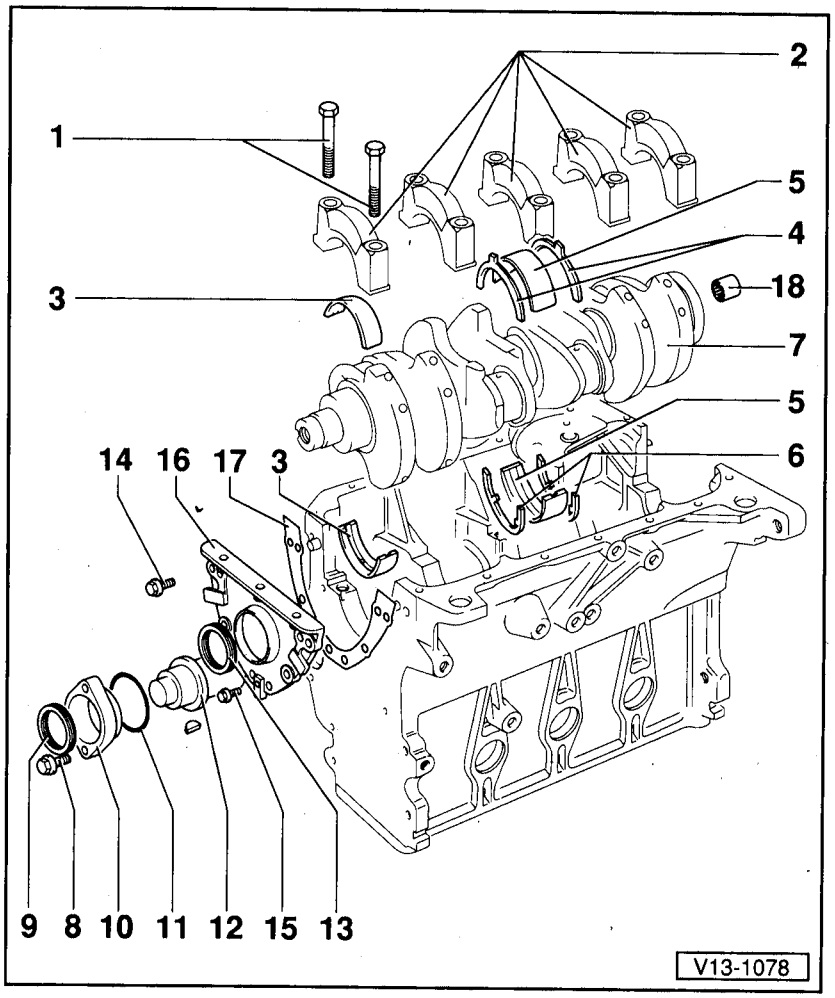

Dismantling and assembling cylinder block, crankshaft and flywheel

1 - 65 Nm

2 - Bearing cap
- Bearing cap 1: V-belt pulley end
- Bearing cap 3: with recesses for thrust washer
- Retaining lugs of bearing shells must be above one another

3 - Bearing shells 1, 2, 4 and 5
- For bearing caps 1, 2 and 5 without lubrication groove
- For bearing cap 4 and cylinder block with lubrication groove
- Do not interchange used bearing shells (mark)

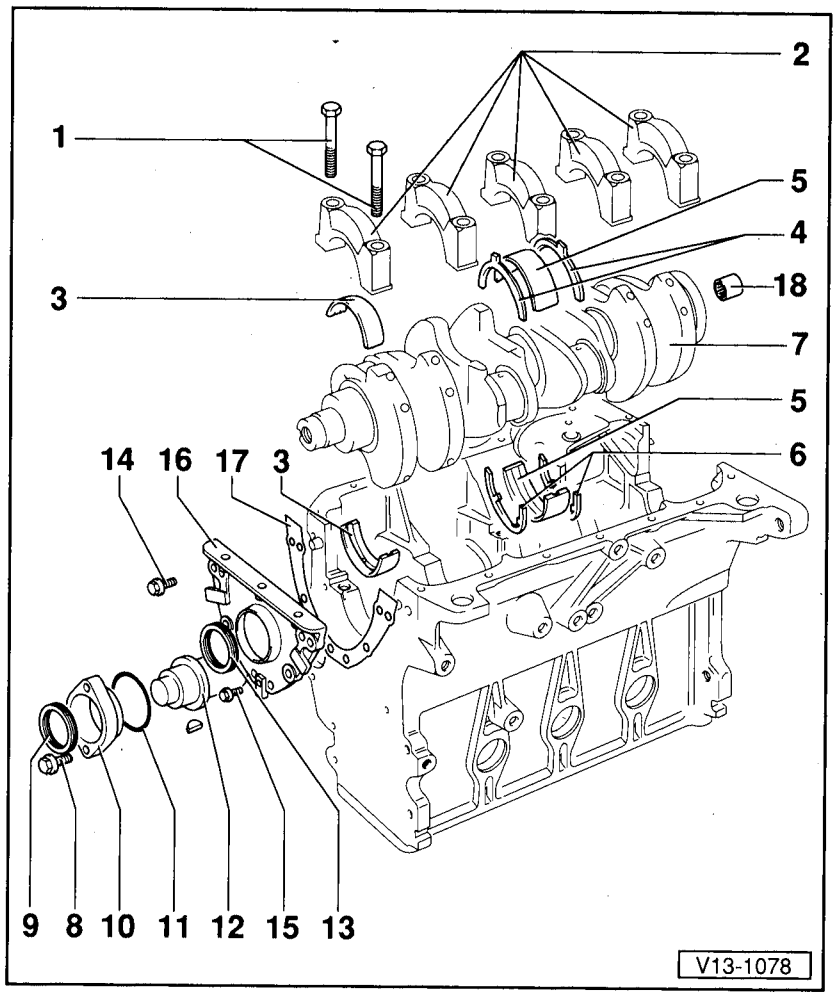

4 - Thrust washer
- For bearing cap 3
- Note fixing arrangement

5 - Bearing cap 3
- For bearing cap without lubrication groove
- For cylinder block with lubrication groove

6 - Thrust washer
- For cylinder block, bearing 3

7 - Crankshaft
- Axial play when
  New: 0.07...0.17 mm
  Wear limit: 0.25 mm
- Measure radial play with plastigage
  New: 0.03...0.08 mm
  Wear limit: 0.17 mm
- Do not rotate crankshaft when measuring radial play
- Crankshaft dimensions
  ⇒ Page 13-27

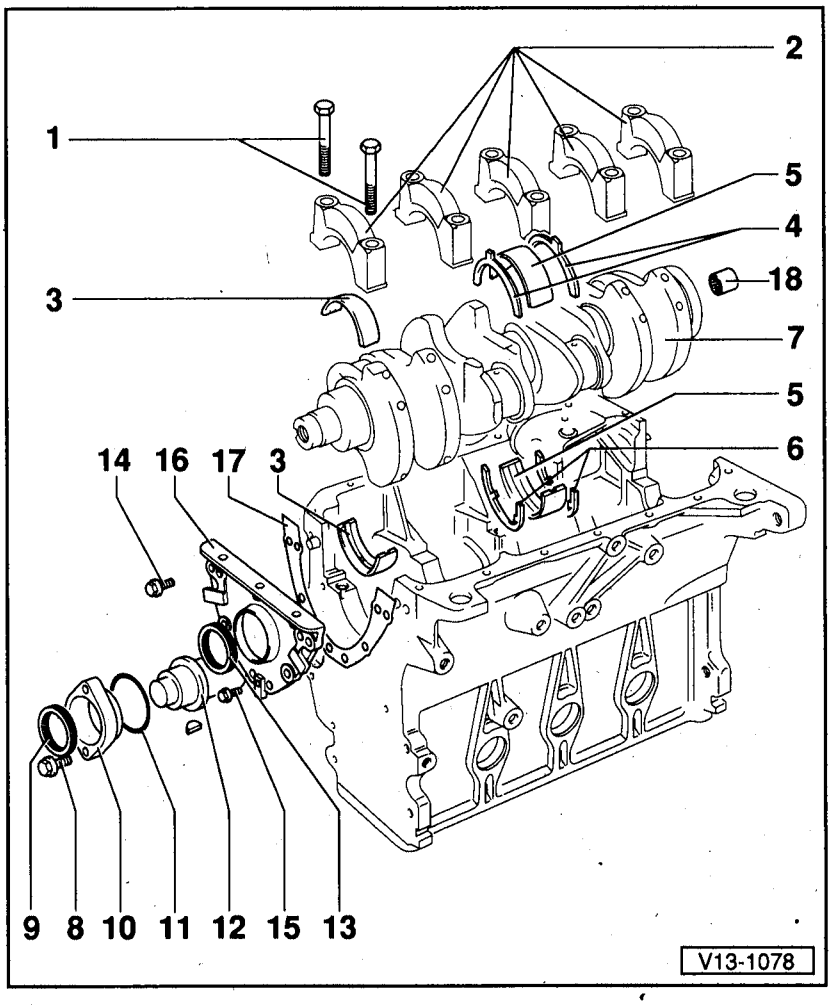

8 - **25 Nm**

9 - **Oil seal**
- Remove sealing flange to remove
- Install with 10-203
- Lightly oil sealing lip of oil seal

10 - **Intermediate shaft sealing flange**

11 - **O-ring**
- Renew if damaged

12 - **Intermediate shaft**

13 - **Oil seal**
- Renewing ⇒ Page 13-25

14 - **25 Nm**

15 - **10 Nm**

16 - **Front sealing flange**

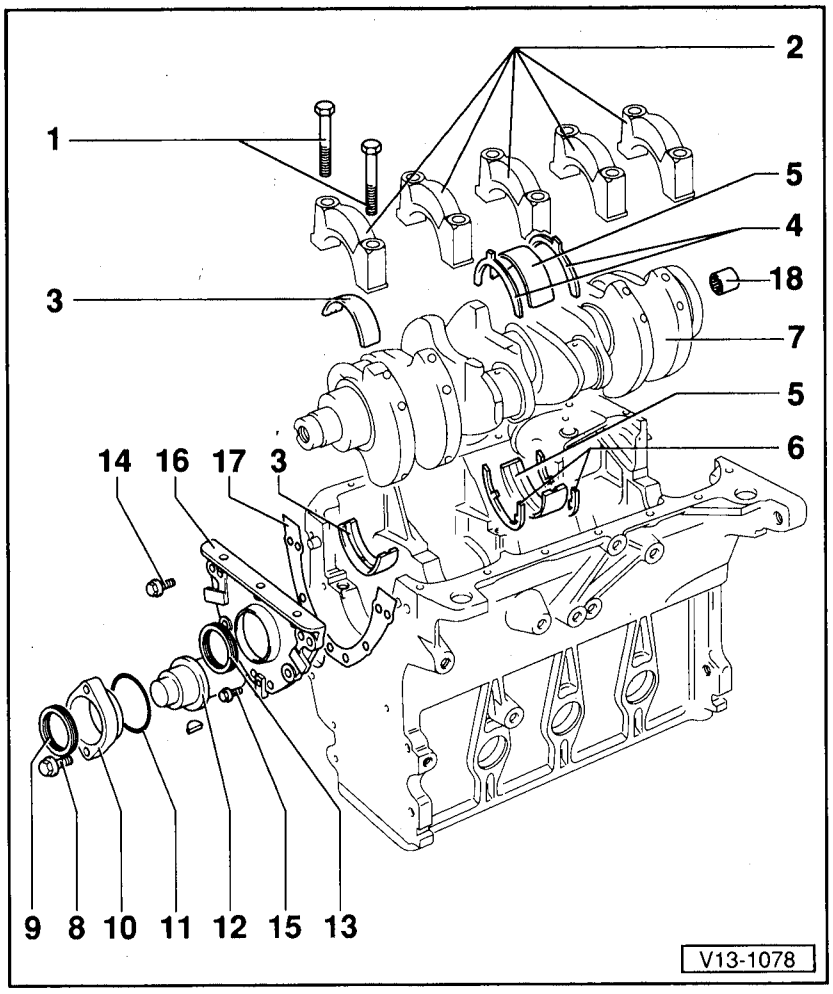

17 - **Gasket**
- Renew

18 - **Needle roller bearing**
- Removing ⇒ Fig. 1
- Installing ⇒ Fig. 2
- Insertion depth ⇒ Fig. 3
- Coat with MoS_2 grease

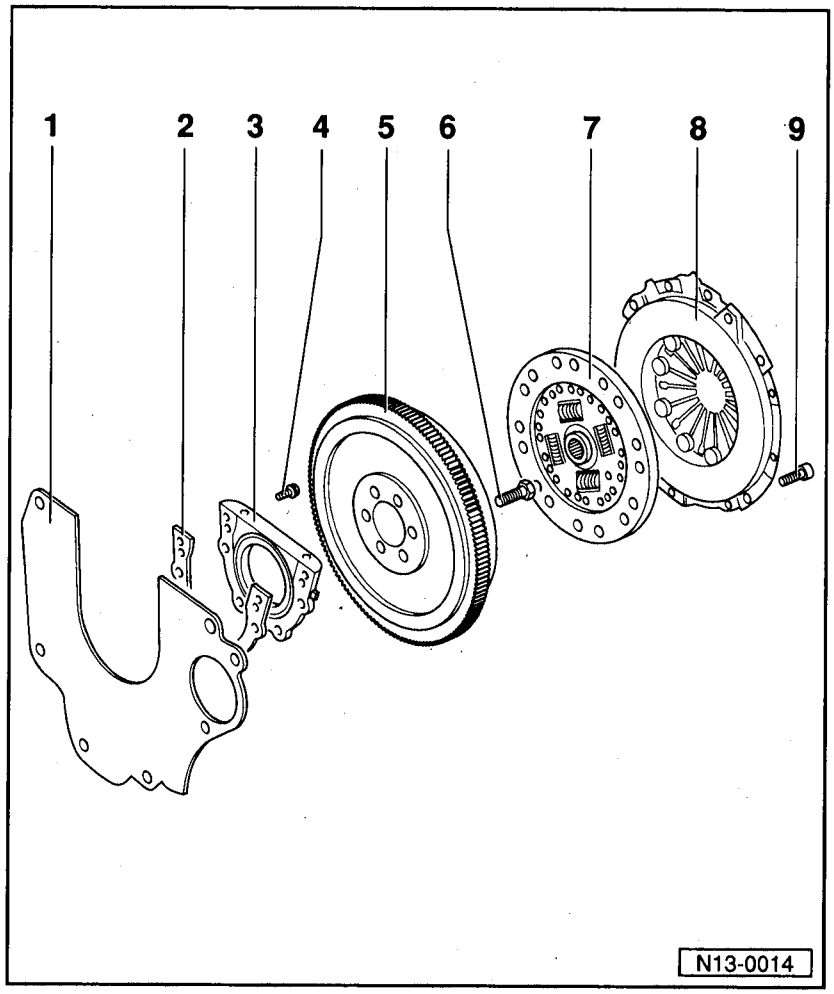

1 - **Intermediate plate**
- Must sit on dowel sleeves
- Do not damage or bend when installing

2 - **Gasket**
- Renew

3 - **Sealing flange with oil seal**
- Only renew complete

4 - **10 Nm**

5 - **Flywheel**
- Removing and installing ⇒ Fig. 4
- Producing timing mark on flywheel ⇒ Page 13-28

6 - **60 Nm + ¼ turn (90°) further**
- Renew

7 - **Clutch plate**
- Centralise with 3176
- To remove and install counter-hold flywheel with 10-201

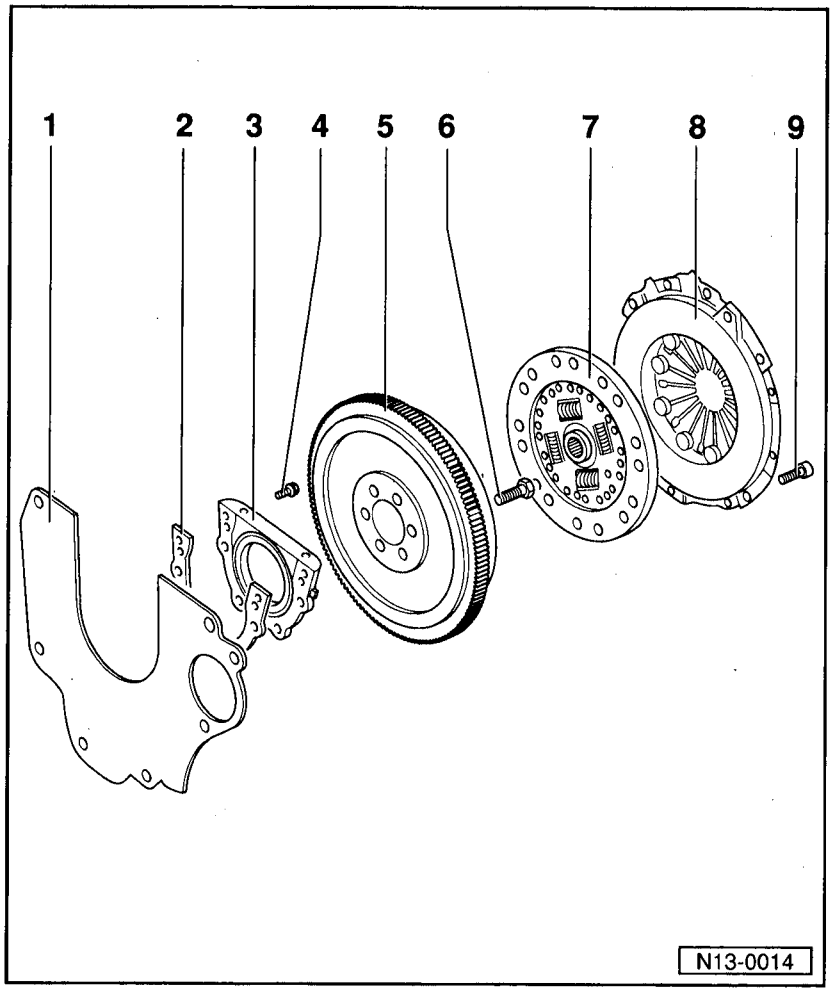

8 - **Pressure plate**
- Mark fitting position

9 - **25 Nm**
- Loosen and tighten diagonally and in stages

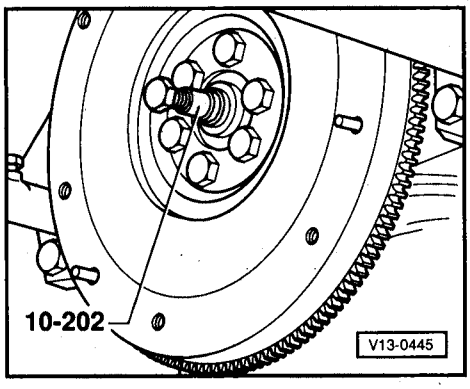

◄ **Fig. 1 Removing needle bearing**

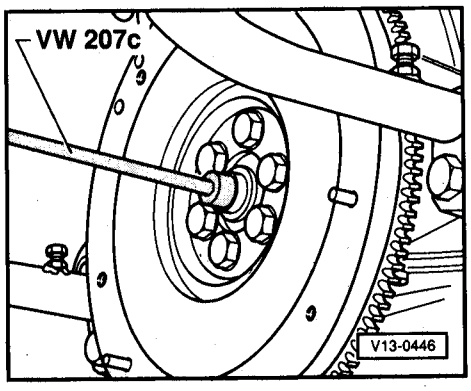

◄ **Fig. 2 Installing needle bearing**

With VW 207c or 3176

Lettering on end of needle roller bearing must be readable when installed.

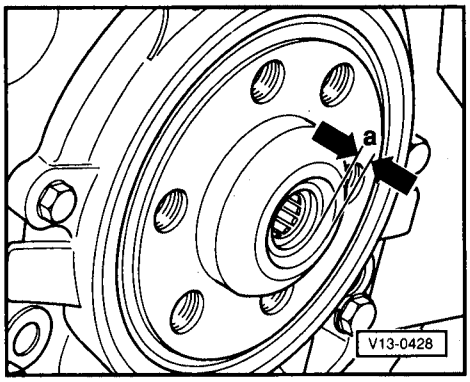

◄ **Fig. 3 Needle bearing insertion depth**

a = 1.5 mm

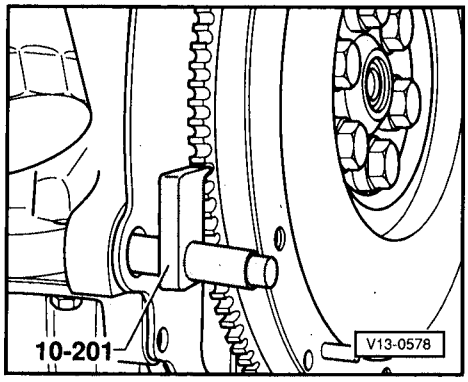

◄ **Fig. 4 Removing and installing flywheel**

Reverse counter-hold tool 10-201 when installing

Renewing crankshaft oil seal - pulley end

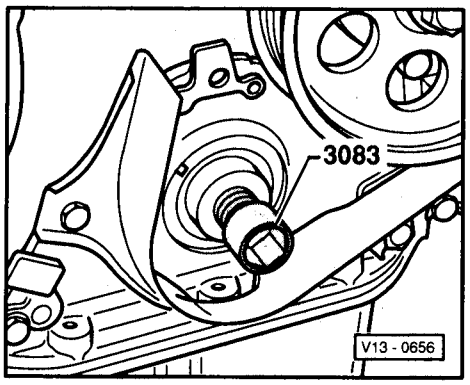

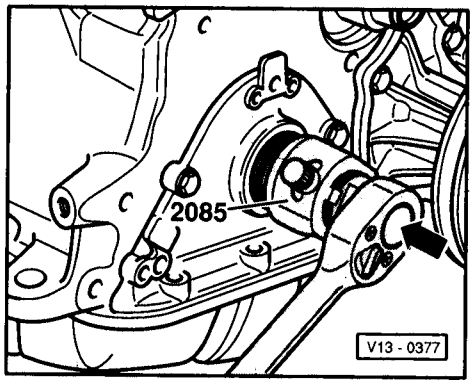

Removing

- Remove toothed belt ⇒ Page 13-11.
- Remove crankshaft sprocket. To do this, lock sprocket with counter hold tool 3099.
- ◄ To guide the oil seal extractor, screw hexagon socket head bolt from 3083 into crankshaft onto stop.
- Unscrew inner part of oil seal extractor 2085 two turns (approx. 3 mm) out from outer part and lock with knurled screw.
- ◄ Oil threaded head of oil seal extractor, align and forcibly screw as far as possible into the oil seal.
- Loosen knurled screw and screw inner part against crankshaft until oil seal has been pulled out.

Installing

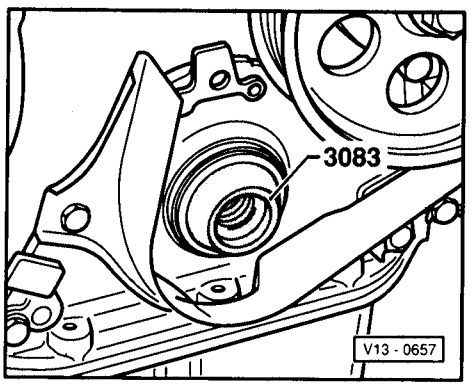

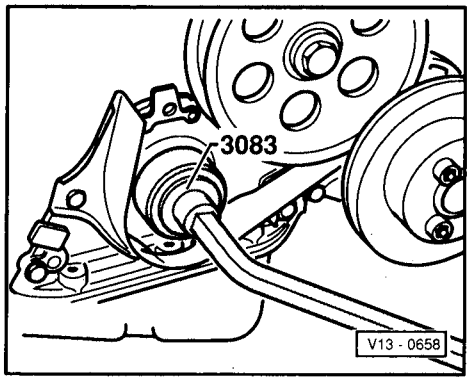

- Lightly oil, oil seal sealing lip.
- ◄ Place guide sleeve from 3083 onto crankshaft journal.
- Slide oil seal over guide sleeve.
- ◄ Press oil seal in onto stop with press sleeve from 3083.
- Install toothed belt ⇒ Page 13-11.

Crankshaft dimensions

(Dimensions in mm)

Honing dimension	Crankshaft main bearing journal Ø	Connecting rod bearing journal Ø
Original size	-0.022 54.00 -0.042	-0.022 47.80 -0.042
1st undersize	-0.022 53.75 -0.042	-0.022 47.75 -0.042
2nd undersize	-0.022 53.50 -0.042	-0.022 47.30 -0.042
3rd undersize	-0.022 53.25 -0.042	-0.022 47.05 -0.042

Producing ignition timing mark on flywheel

On the replacement part flywheel or drive plate there is only a TDC marking -O-.

If a flywheel or drive plate is to be replaced then the relevant timing mark must be remade.

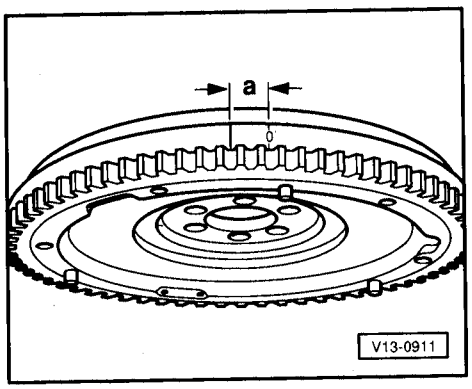

◄ – Scribe ignition timing mark a = 21 mm to left of TDC mark. To do this measure along circumference.

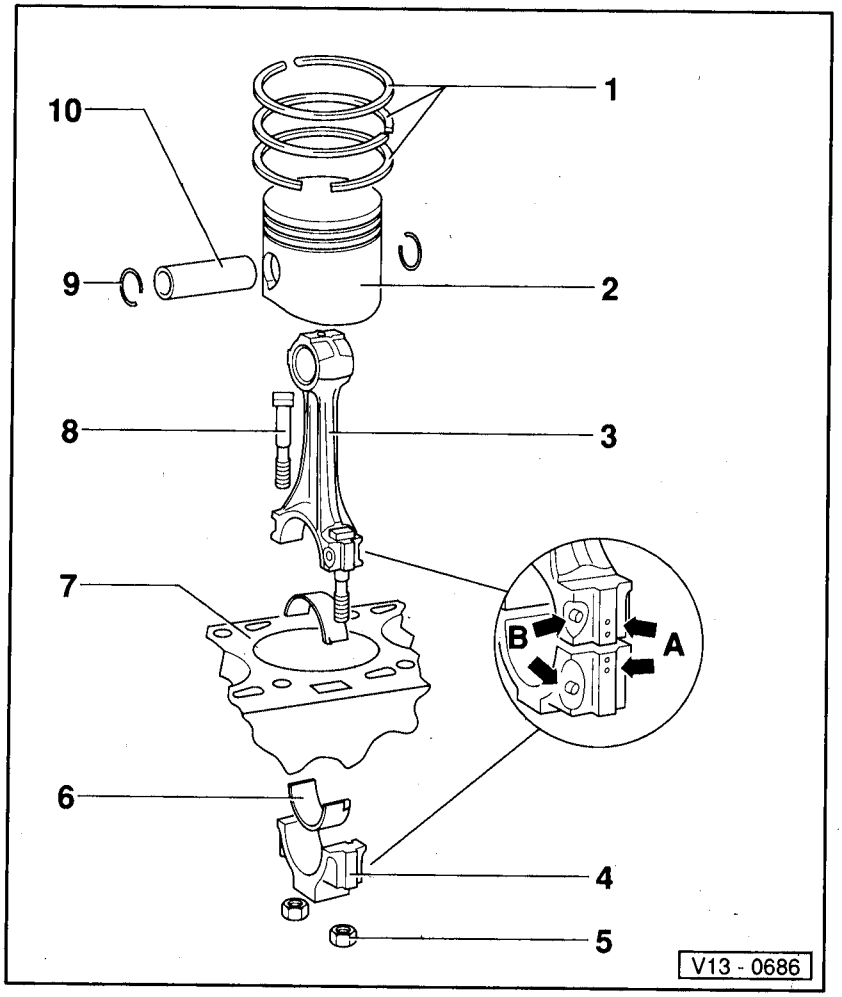

Dismantling and assembling pistons and conrods

1 - Piston rings

- Offset gaps 120°
- Remove and install with piston ring pliers
- Marking "TOP" towards piston crown
- Checking ring gap ⇒ Fig. 1
- Checking side clearance ⇒ Fig. 2

2 - Piston

- Checking ⇒ Fig. 3
- Mark fitting position and cylinder number
- Arrow on piston crown points to belt pulley end
- Install with piston ring clamp
- Characteristics ⇒ Fig. 4

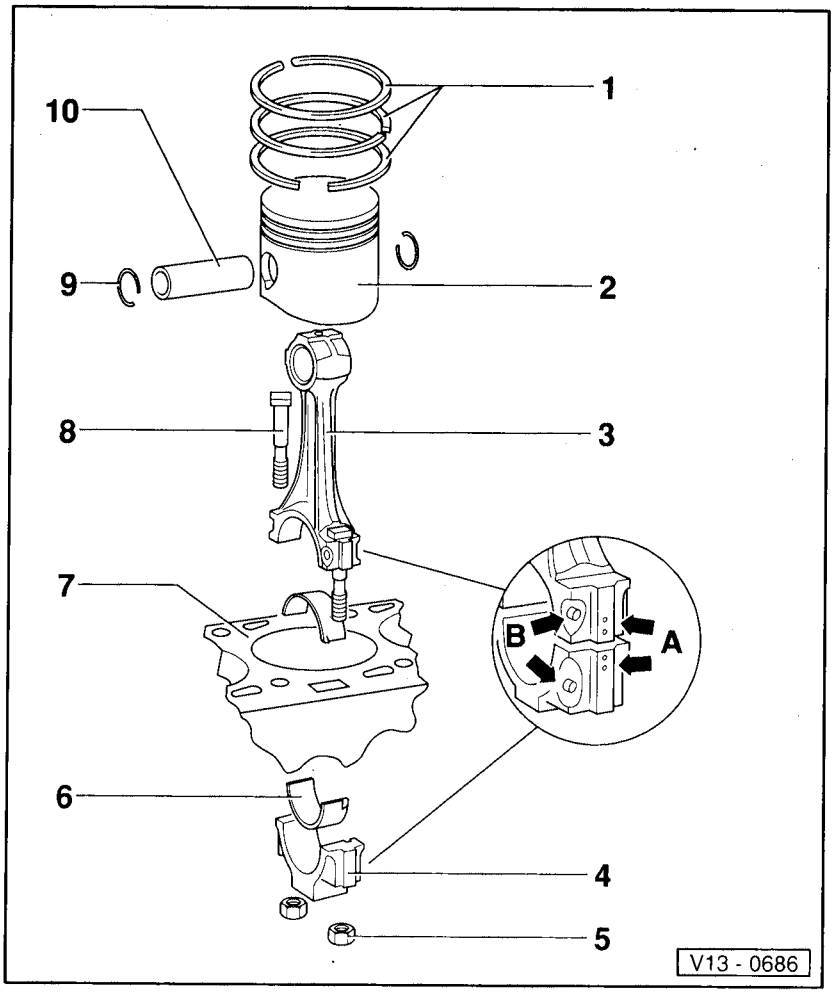

3 - Conrod

- Renew in sets only
- Mark with cylinder number -A-
- Installation position:
  marks -B- face towards belt pulley end

4 - Conrod cap

- Installation position:
  markings -B- face towards pulley end

5 - 30 Nm + ¼ turn (90°) turn further

- Oil thread and head contact surface
- When measuring radial clearance tighten to 30 Nm, do not turn further

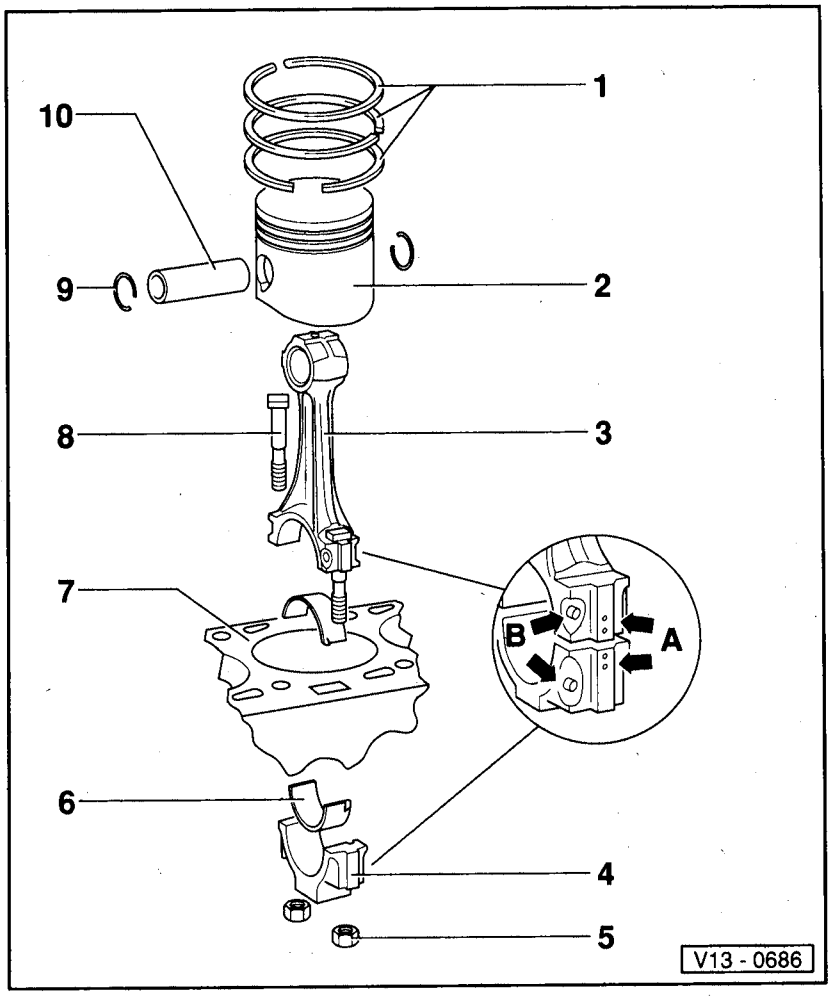

6 - Bearing shell

- Note installation position
- Do not interchange used bearing shells
- Ensure retaining lugs are firmly seated
- Axial play:
  New: 0.5...0.31 mm
  Wear limit 0.37 mm
- Measure radial play with plastigage:
  New: 0.1...0.06 mm
  Wear limit: 0.12 mm
  Do not rotate crankshaft when measuring radial play.

7 - Cylinder block

- Checking cylinder bores
  ⇒ Fig. 5
- Piston and cylinder dimensions
  ⇒ Page 13-35

8 - Conrod bolt

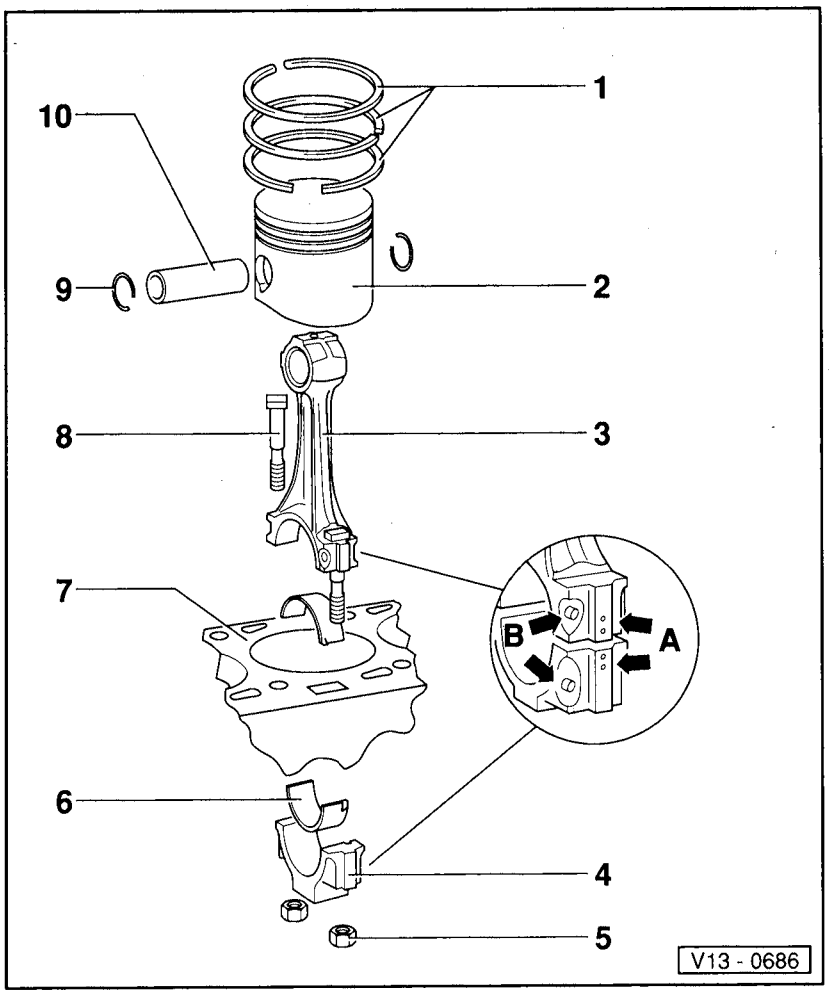

9 - Circlip

10 - Piston pin

- If tight, heat piston to approx. 60°C
- Use VW 222a to remove and install

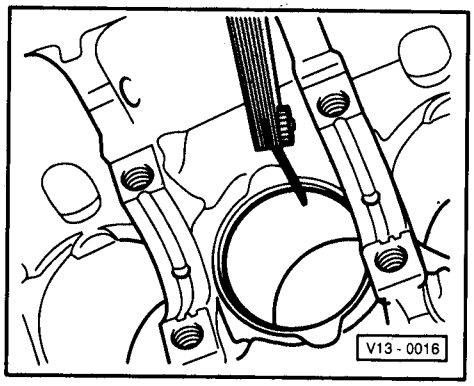

◄ **Fig. 1 Piston ring - Checking ring gap**

- Slide ring in squarely from above down to bottom end of cylinder approx. 15 mm from bottom edge.

Piston Ring	Ring gap	
	New	Wear limit
Compression rings	0.30...0.45	1.0
Oil scraper ring	0.25...0.40	1.0

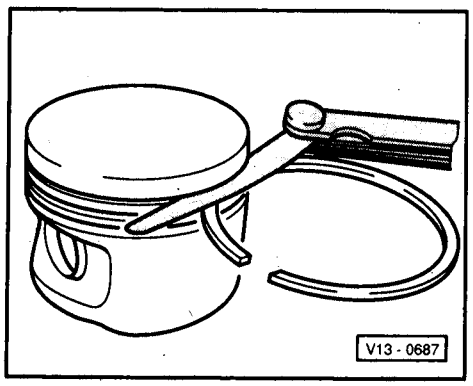

◄ **Fig. 2 Piston rings - Checking side clearance**

Clean the ring groove before checking.

Piston Ring	Side clearance	
	New	Wear limit
Compression rings	0.02...0.05	0.15
Oil scraper ring	0.02...0.05	0.15

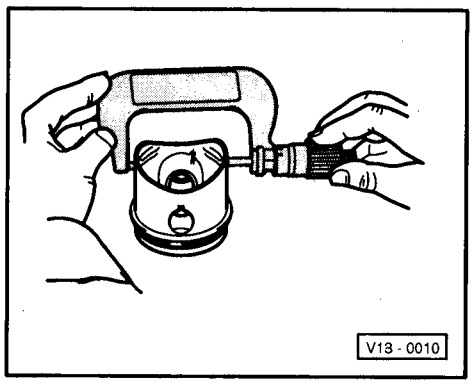

◄ **Fig. 3 Checking pistons**

Measure piston approx. 15 mm from skirt and offset 90° to piston pin.

Deviation from nominal dimension
max. 0.04 mm.

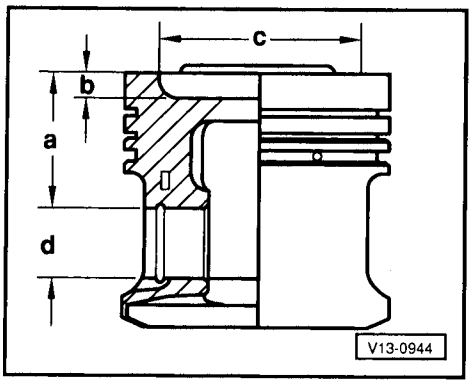

◄ **Fig. 4 Piston characteristics**

a = 22.2 mm

b = 8.1 mm

c = 81.0 mm Ø

d = 20.0 mm Ø

During repairs to engine, only same version pistons and piston rings and pistons of same weight class may be installed.

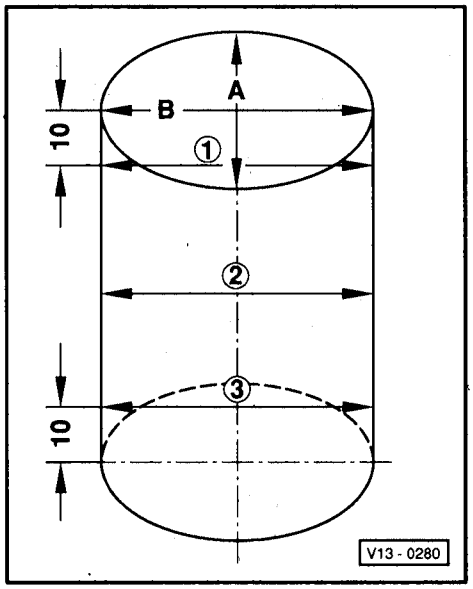

◄ **Fig. 5 Checking cylinder bores**

- Measure at 3 locations, across -A- and in line -B-.
- Use internal dial gauge 50...100 mm.
- Deviation from nominal dimension max. 0.08 mm.

Note:

Cylinder bore measurement must not be done when the cylinder block is mounted on repair stand with adapter VW 540, as this can cause incorrect measurements.

Piston and cylinder dimensions

Honing Size		Piston Ø	Cylinder bores Ø
Basic size	mm	80.98	81.01
1st oversize	mm	81.23	81.26
2nd oversize	mm	81.48	81.51

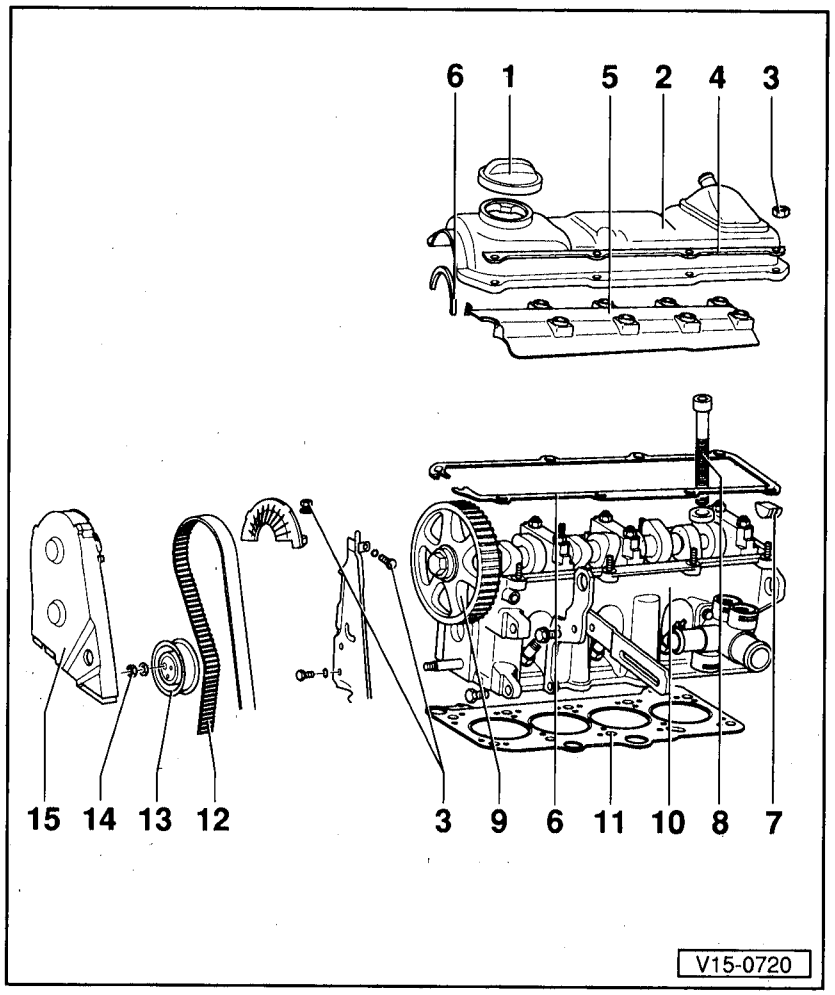

Removing and installing cylinder head

Checking compression pressures
⇒ Page 15-9

Note:

- *If an exchange cylinder head with camshaft is installed then adjusting valve clearance is not required, but the contact surfaces between the bucket tappets and the cam face must be lubricated after installing the head.*
- *The plastic caps supplied for protecting the open valves must not be removed until immediately prior to fitting the cylinder head.*
- *When replacing the cylinder head, fill complete system with fresh coolant.*

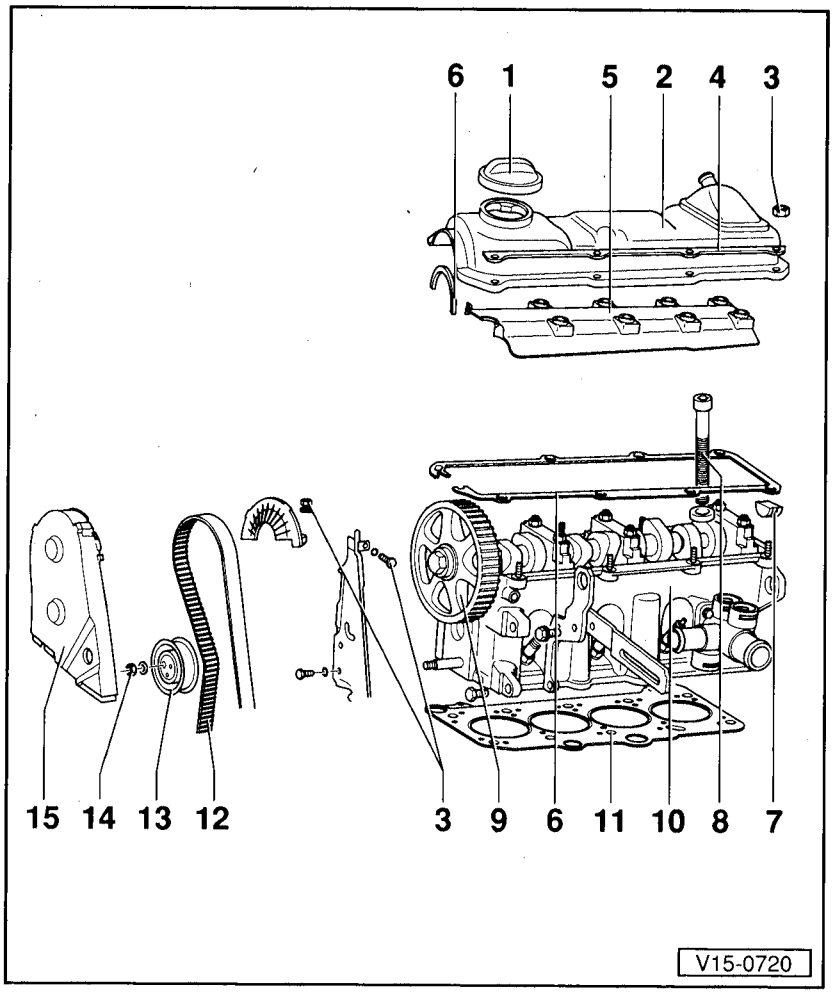

1 - **Cover cap**
  - Renew seal if damaged

2 - **Cylinder head cover**

3 - **10 Nm**

4 - **Reinforcing strip**

5 - **Oil deflector**
  - Only with hydraulic bucket tappets

6 - **Cylinder head cover gasket**
  - Renew

7 - **Sealing plug**
  - Renew

8 - **Cylinder head bolts**
  - Note sequence when loosening and tightening ⇒ Page 15-5, Removing and installing cylinder head.
  - Renew

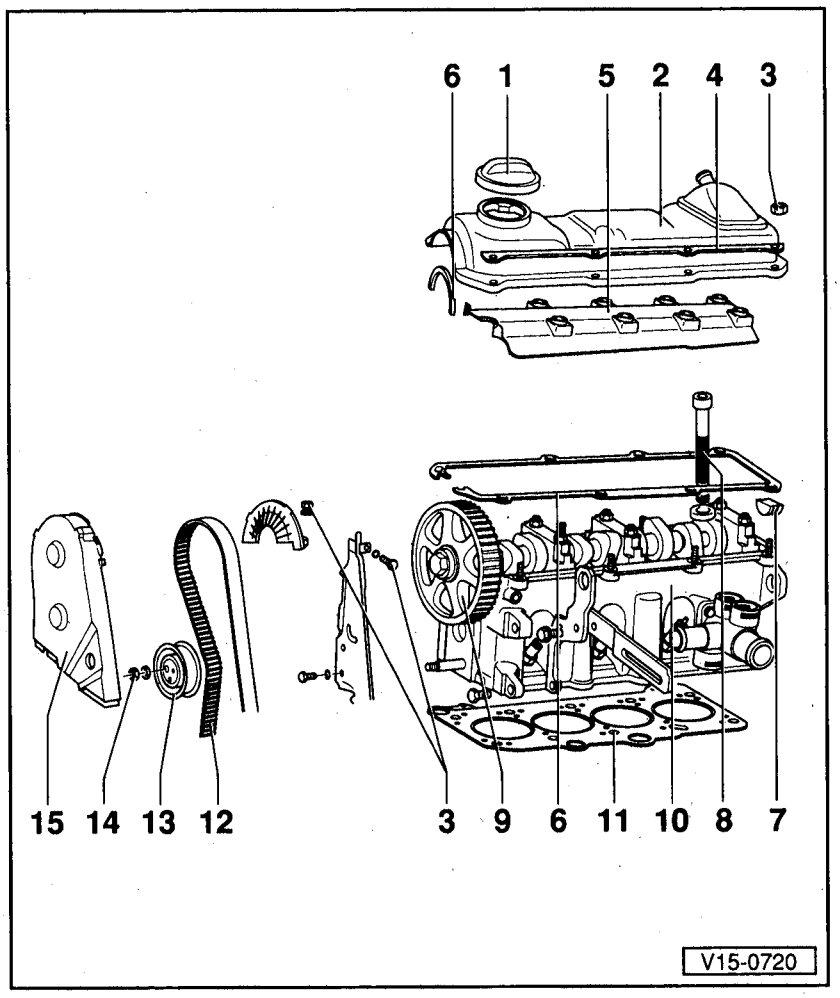

9 - Camshaft sprocket
- Observe position when installing toothed belt ⇒ Page 13-11, Removing, installing and tensioning toothed belt.

10 - Cylinder head
- Checking for distortion ⇒ Fig. 1
- Removing and installing ⇒ Page 15-5
- After replacing, fill complete system with new coolant

11 - Cylinder head gasket
- Renew
- When installing note centralising pins in cylinder head
- Marking "Oben" (Top) must face towards cylinder head
- After replacing, fill the entire system with new coolant

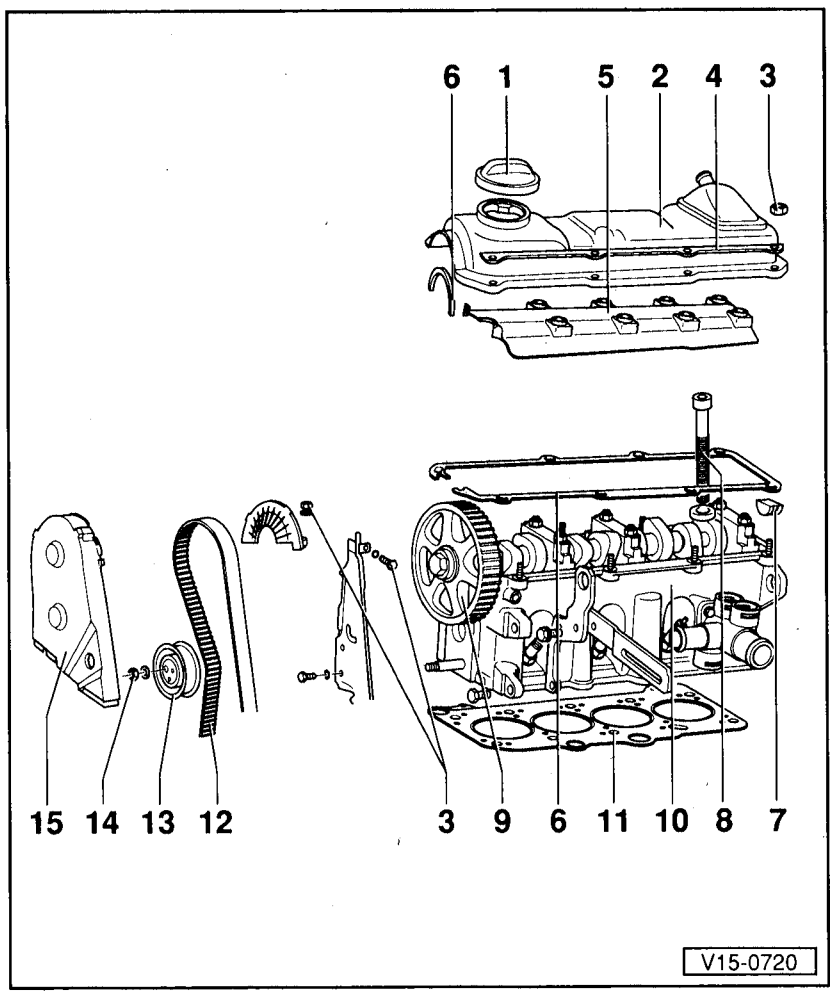

12 - Toothed belt
- Before removing mark direction of rotation
- Check for wear
- Do not kink
- Removing, installing and tensioning ⇒ Page 13-11

13 - Tensioning roller

14 - 45 Nm

15 - Upper toothed belt guard
04.88 ➢ as illustrated
➢ 03.88 metal version

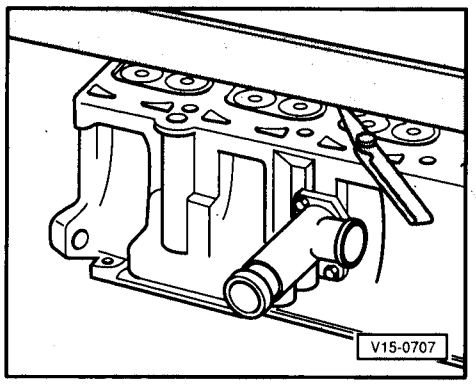

◄ **Fig. 1 Checking the cylinder head for distortion**

Maximum permissible distortion: 0.1 mm

Removing and installing cylinder head

Note:

- *Only unpack cylinder head gasket immediately prior to fitting.*
- *Handle gasket with great care. Damage will lead to leaks.*

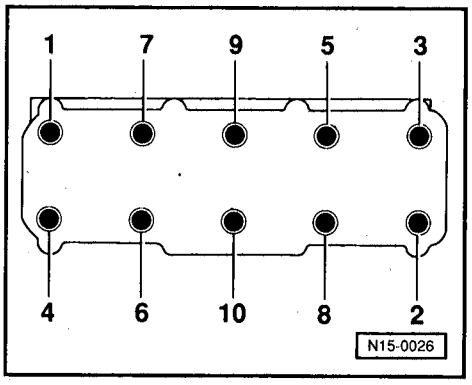

Removing

◄ – Observe sequence when loosening cylinder head bolts.

Installing

- Engine cold
- Pistons not at TDC.

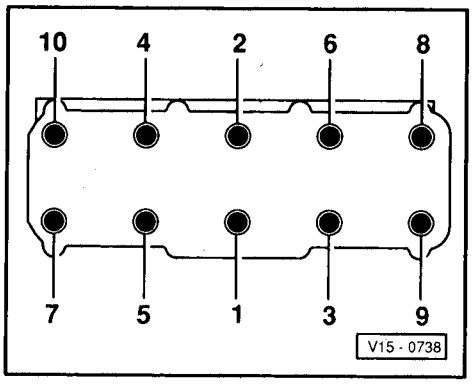

◄ – To centralise, screw guide pins from 3070 into the threaded holes for cylinder head bolts 8 and 10.

– Fit cylinder head gasket.

– Fit cylinder head, insert cylinder head bolts into the remaining 8 holes and tighten hand tight.

– Unscrew the guide pins from the bolt holes using the removal tool from 3070 and insert cylinder head bolts.

Note:

For engines with centralising pins for cylinder head gasket in cylinder head the centralising with guide pins from 3070 is no longer required

– Tighten all bolts in 4 stages in the sequence shown as follows.

– 1. Pre tighten with torque wrench
  Stage I = 40 Nm
  Stage II = 60 Nm

– 2. Turn further with normal spanner
  Stage III = ¼ turn (90°)
  Stage IV = ¼ turn (90°)

Note:

Retightening the cylinder head bolts is no longer necessary

Checking compression pressures

- Engine oil temperature at least 30° C

- Pull connector off Hall sender (distributor) or for engines without a Hall sender, pull high tension cable from ignition coil off at distributor and place to earth (-).

- Open throttle valve completely.

- Check compression pressures with compression tester V.A.G. 1381 or V.A.G 1763.

Note:

Using the compression tester ⇒ operating instructions.

- Operate starter until no further pressure increase is indicated on the compression tester.

Compression pressure values

New: 9...12 bar
Wear limit: 7.5 bar

Max. permissible differences between all cylinders: 3.0 bar

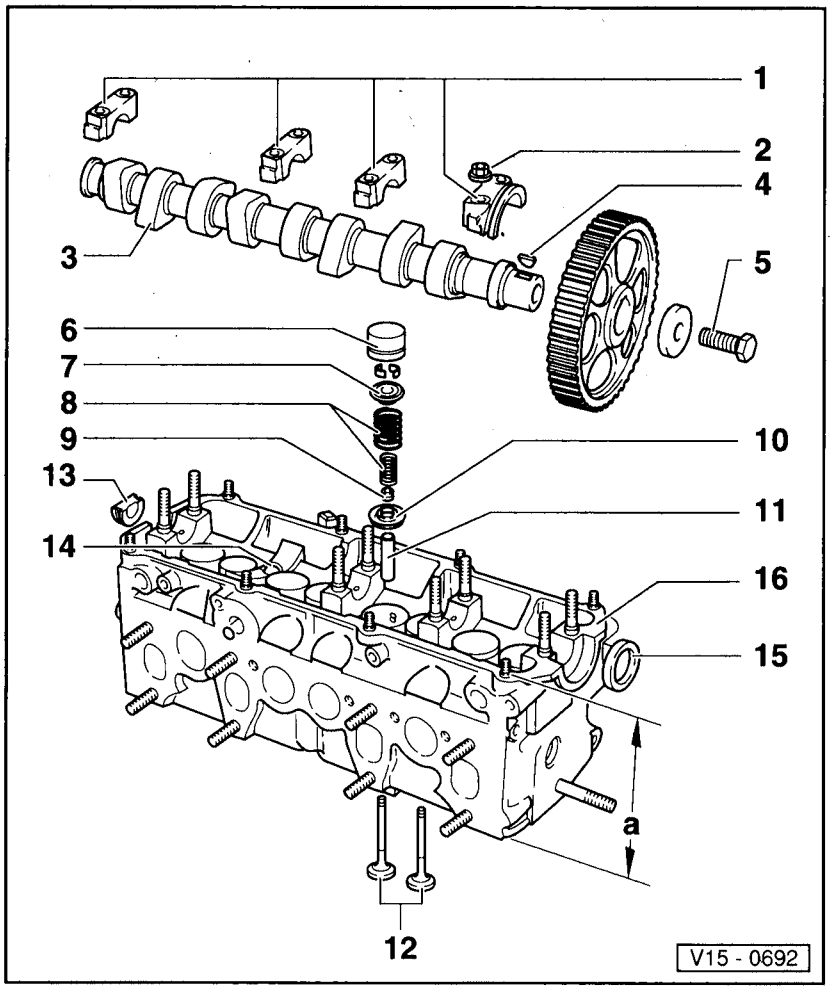

Servicing valve gear

Note:

Cylinder heads which have cracks between the valve seats or between a valve seat and a spark plug threaded hole can be used further without reducing in-service life, provided the cracks are small, not more than 0.5 mm wide or only the 1st thread is cracked.

1 - Bearing cap

- For engines without hydraulic bucket tappets, with bearing cap 4
- Installation position ⇒ Fig. 2
- Installation sequence
  ⇒ Page 15-22, Removing and installing camshaft

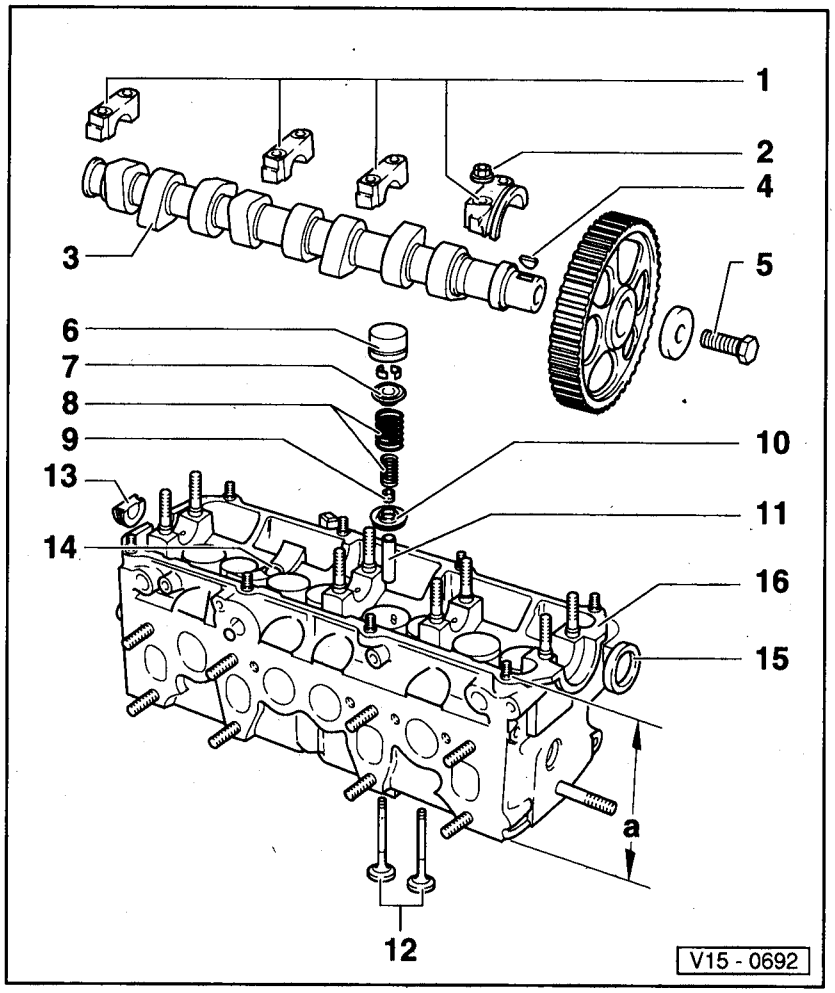

2 - 20 Nm

3 - Camshaft
- Checking axial play ⇒ Fig. 1
- Removing and installing ⇒ Page 15-22
- Measure radial clearance with plastigage
  Wear limit: 0.1 mm
- Run-out: max. 0.01 mm
- Identification and valve timing ⇒ Fig. 4

4 - Woodruff key
- Check securely seated

5 - 80 Nm
- Loosen and tighten with counter hold 3036

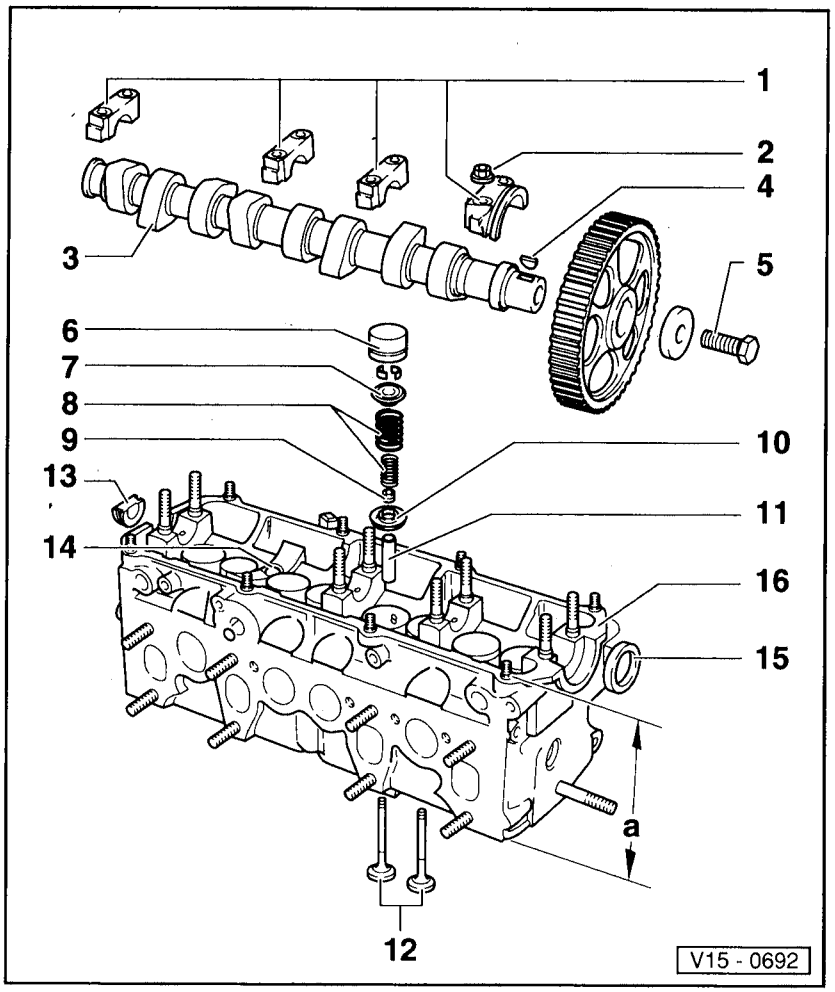

6 - Bucket tappets
- With shims
- Do not interchange
- Before installing, check camshaft axial play ⇒ Fig. 1
- Oil contact surfaces
- Checking and adjusting clearances ⇒ Page 15-28

Hydraulic bucket tappets
- Do not interchange
- Checking ⇒ Page 15-24
- Place contact surfaces downwards
- Before installing, check camshaft axial play ⇒ Fig. 1
- Oil contact surfaces

7 - Upper valve spring seat
- Identification:
  Wider chamfer outwards
  chamfer inwards

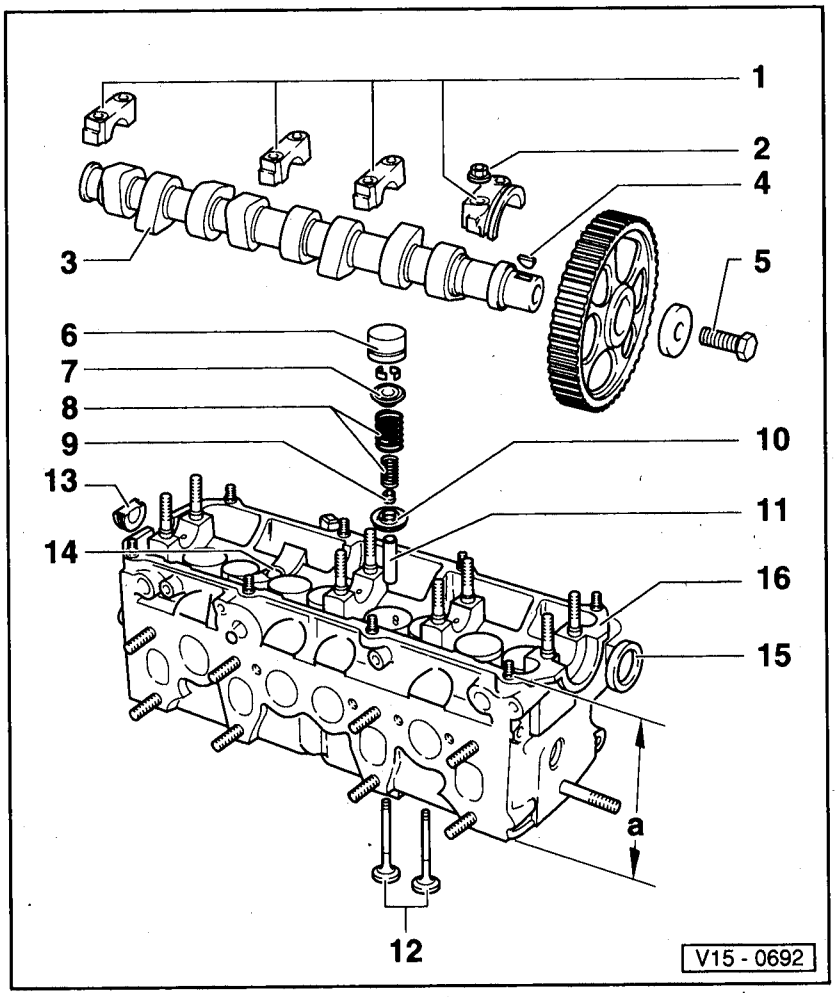

8 - Valve springs
- Removing and installing:
  Cylinder head
  removed: with 2036 and VW 541/1A
  installed: ⇒ Page 15-27,
  renewing valve stem seals

9 - Valve stem seal
- Renewing ⇒ Page 15-27

10 - Lower valve spring seat,
- Remove and install with 3047A

11 - Valve guide
- Checking ⇒ Page 15-25
- Renewing ⇒ Page 15-26
- Service version with collar

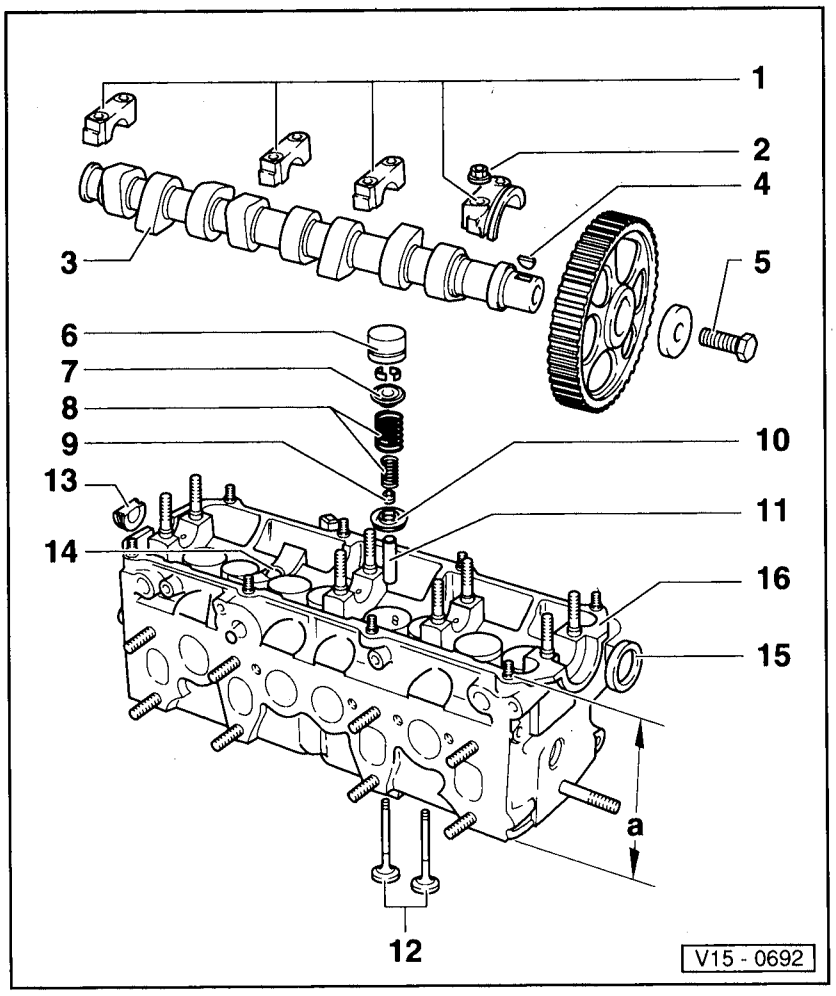

12 - Valves
- Do not rework, only lapping in is permitted
- Valve dimensions ⇒ Fig. 5
- Checking and adjusting valve clearances ⇒ Page 15-28 (not for hydraulic bucket tappets)

13 - Sealing plug
- Renew

14 - Oil non-return device
- Only hydraulic bucket tappets (4 bearing caps)

15 - Seal
- Renewing ⇒ Page 15-20

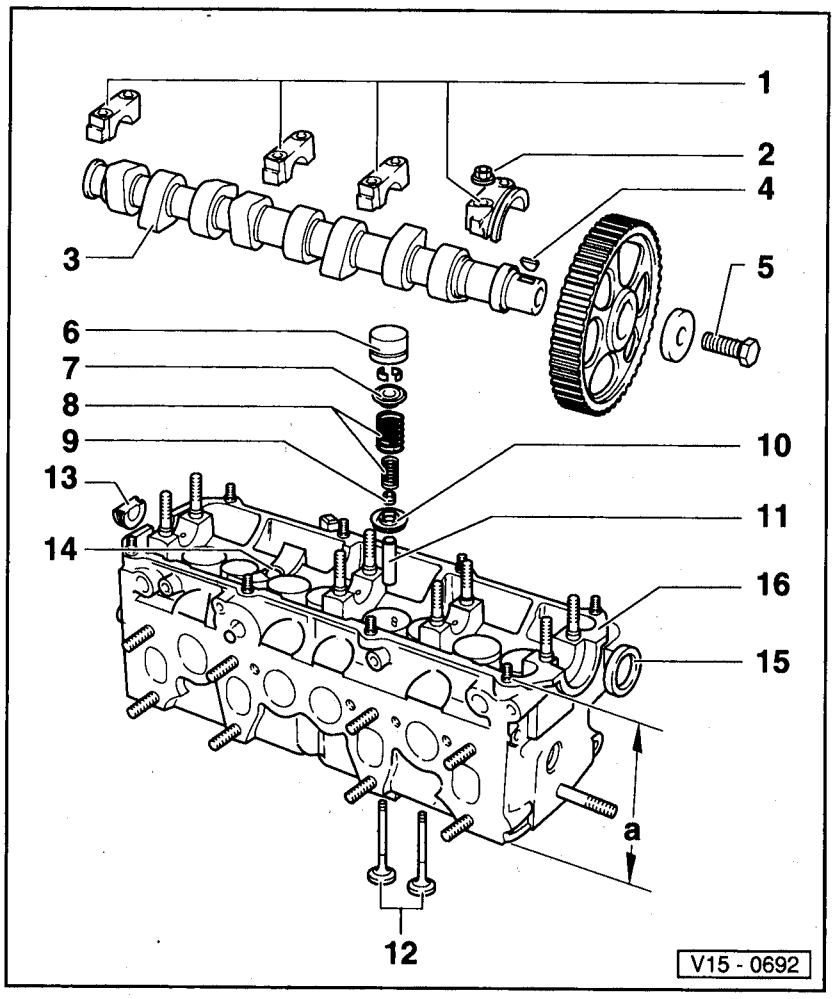

16 - Cylinder head

- Exchange cylinder head with camshaft bearing caps ⇒ Fig. 3
- Observe notes ⇒ Page 15-8
- Reworking valve seats ⇒ Page 15-17
- Reworking dimensions a = 132.55 mm (minimum height)
- After replacing, fill the entire system with new coolant
- Checking and adjusting valve clearances ⇒ Page 15-28 (not for hydraulic bucket tappets

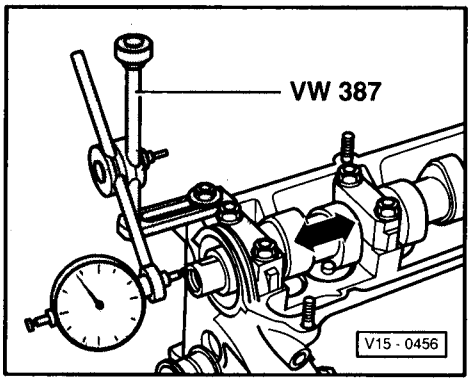

◄ **Fig. 1 Checking camshaft axial play**

Wear limit: max. 0.15 mm

Measure with bucket tappets removed and first and last bearing caps fitted.

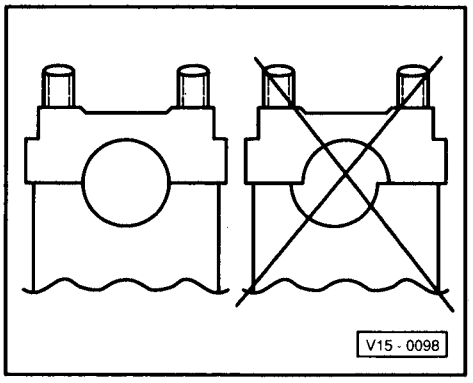

◄ **Fig. 2 Camshaft bearing cap installation position**

Note offset. Before installing the camshaft, fit bearing caps to determine correct fitting positions.

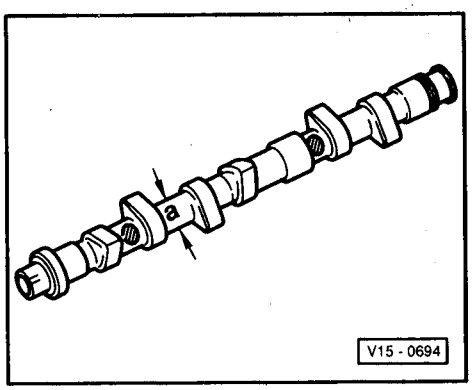

◄ **Fig. 3 Exchange cylinder head with camshaft bearing caps**

Exchange cylinder heads or exchange engines are sometimes delivered with camshaft bearing caps.

A - Cylinder head with nominal dimension camshaft
a = 26.00 mm ∅

B - Cylinder head with under-size dimension camshaft
a = 25.75 mm ∅ and a yellow spot on VW- Audi symbols.

Note:

Under-size camshaft are not delivered as a spare part. In cases of repair, install a nominal size camshaft and bearing caps.

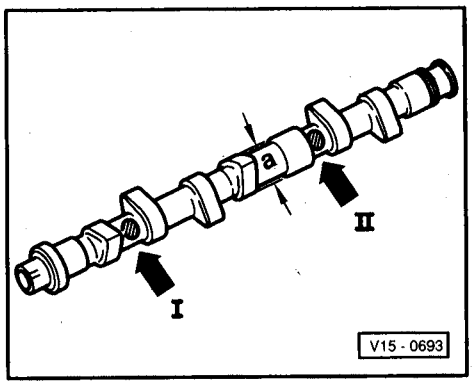

◄ **Fig. 4 Camshaft markings, timing with hydraulic tappets**

- Cam base diameter: a = 34 mm ∅
- Marked by embossed figures and letters between inlet and exhaust cams:

  No. 1 cylinder -arrow I- : A
  No. 3 cylinder -arrow II- : 026

Camshaft markings for adjustable bucket tappets

- Cam base diameter: a = 38 mm ∅

- Yellow spot between first and second cam.

Valve timing at 1 mm valve lift

Inlet valve opens BTDC: 5°
Inlet valve closes ABDC: 21°
Exhaust valve opens BBDC: 41°
Exhaust valve closes ATDC: 3°

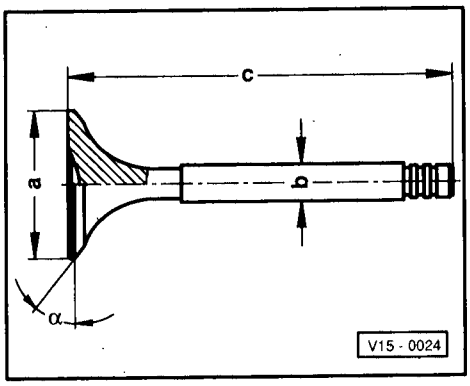

◄ **Fig. 5 Valve dimensions**

Note:

It is not permitted to rework valves, only lapping in is permitted.

Inlet valve

Dimensions		Adjustable bucket tappet	Hydraulic bucket tappet
Ø a	mm	38.00	38.00
Ø b	mm	7.97	7.97
c	mm	98.70	91.00

Dimensions		Adjustable bucket tappet	Hydraulic bucket tappet
Repair	mm	98.20	-
α	∠°	45	45

Exhaust valve

Dimensions		Adjustable bucket tappet	Hydraulic bucket tappet
Ø a	mm	33.00	33.00
Ø b	mm	7.95	7.95
c	mm	98.50	90.80
Repair	mm	98.00	-
α	∠°	45	45

Reworking valve seats

Note:

- *When repairing engines with leaking valves, it is not sufficient to rework/lapp or renew the valve seats and valves. Particularly in the case of engines which have high operating hours, it is also necessary to check the valve guides for wear.*
- *Rework the valve seats only enough to produce a perfect contact surface. Before reworking commences, calculate the maximum permissible reworking dimension. If this dimension is exceeded, the correct functioning of the hydraulic tappets*

can no longer be guaranteed and the cylinder head must be renewed.

Calculating max. permissible reworking dimension

– Insert valve and press in hard against valve seat.

Note:

If the valve is to be renewed during the repair work, use a new valve for the measurement.

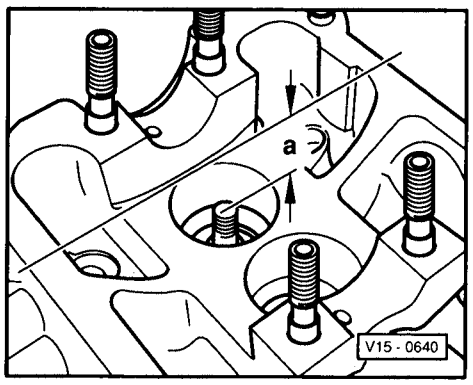

◄ – Measure dimension -a- between end of valve stem and upper edge of the cylinder head.

– Calculate the maximum permissible reworking dimension from the measured value -a- and the minimum dimension.

Bucket tappet	Inlet valve	Exhaust valve
with shim	26.75 mm	26.95 mm
hydraulic	33.80 mm	34.10 mm

Measured value -a- minus minimum dimension
= permissible reworking dimension.

Example:

	Measured dimension	35.1 mm
–	Minimum dimension	34.4 mm
=	max. permissible reworking dim.	0.7 mm

Note:

If the measured value -a- is less than the minimum dimension, then repeat measuring sequence and if necessary use shorter valves (valve length -c- *⇒ Page 15-16, Fig. 5* *or renew cylinder head.*

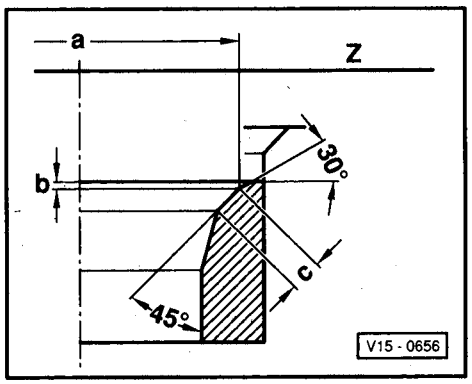

◄ **Reworking inlet valve seats**

Dimensions		Inlet valve seat
Ø a	mm	37.2
Ø b	mm	Max. permissible reworking dim.
c	mm	approx. 2.0
Z		cylinder head lower edge
45°		Valve seat angle
30°		Correction angle

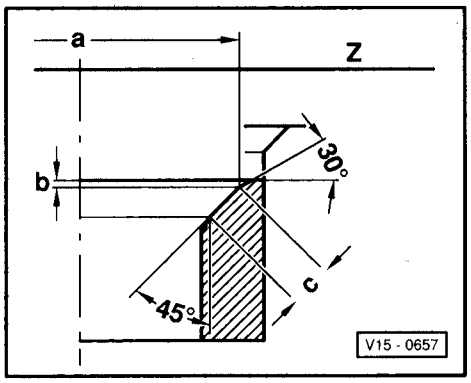

◄ **Reworking exhaust valve seats**

Dimensions		Exhaust valve seat
Ø a	mm	32.4
Ø b	mm	Max. permissible reworking dim.
c	mm	approx. 2.4
Z		cylinder head lower edge
45°		Valve seat angle
30°		Correction angle

Note:

Exhaust valve seats are additionally provided with a restriction. When reworking, it is essential that the restriction radius is not damaged.

Renewing camshaft oil seal

Removing

- Remove upper toothed belt guard.
- Loosen camshaft sprocket (use counter hold tool 3036).
- Set camshaft sprocket to TDC No 1 cylinder by turning crankshaft.

- Loosen tensioning roller and remove toothed belt.
- Pull off camshaft sprocket.
- Remove woodruff key from camshaft.
- Screw camshaft sprocket securing bolt with washer into camshaft onto stop.

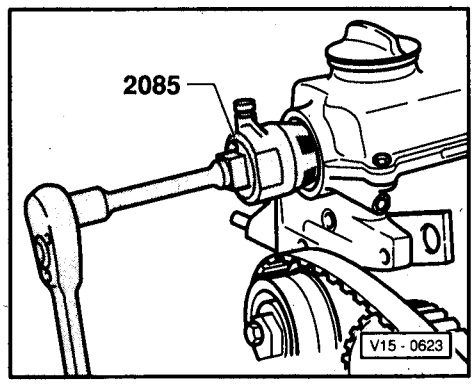

◄ - Unscrew inner part of seal puller 2085 two full turns (approx. 3 mm) out from outer part and lock with knurled bolt.
- Lubricate seal puller threaded head, fit and under forceful pressure, screw as far as possible into seal.
- Loosen knurled bolt and screw inner part against camshaft until seal is pulled out.
- Tension seal puller on flattened sides in a vice and remove seal using pliers.

Installing

- Lightly lubricate seal sealing lips.
- Position seal with sleeve from 10-203 and press in flush.

- Install toothed belt, tension (adjusting timing) ⇒ Page 13-11.

Removing and installing camshaft

Removing

- Remove air cleaner.
- Remove upper toothed belt guard.
- Loosen camshaft sprocket (use counter hold tool 3036).
- Set camshaft sprocket to TDC No 1 cylinder by turning crankshaft.
- Remove cylinder head cover.
- Loosen tensioning roller and remove toothed belt.
- Pull off camshaft sprocket.
- Remove woodruff key from camshaft.

Engines without hydraulic valve clearance compensation:

- First remove bearing caps 5, 1 and 3, then remove bearing caps 2 and 4 by loosening alternately and diagonally.

Engines with hydraulic valve clearance compensation:

- First remove bearing caps 1 and 3.
- Loosen bearing caps 2 and 5 alternately and diagonally.

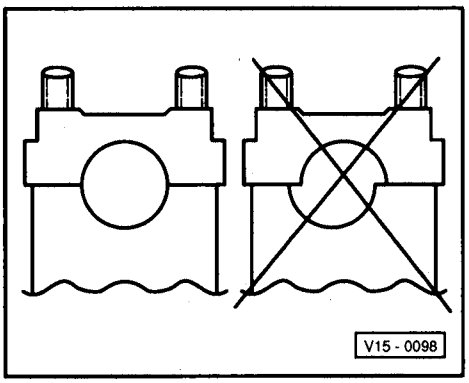

Installing

- *When installing camshaft, No 1 cylinder cams must point upwards*
- *When installing bearing cap note hole offset. Before installing the camshaft, fit bearing caps to determine correct fitting positions.*

– Oil the camshaft contact surfaces.

Engines without hydraulic valve clearance compensation.

– Tighten bearing caps 2 and 4 alternately and diagonally and tighten to:
  20 Nm.

– Install bearing caps 1, 3 and 5 and tighten also to:
  20 Nm.

Engines with hydraulic valve clearance compensation:

– Tighten bearing caps 2 and 5 alternately and diagonally and tighten to:
  20 Nm.

– Install bearing caps 1 and 3 and tighten also to:
  20 Nm.

– Install camshaft sprocket and tighten to:
  80 Nm
  (use counter hold tool 3036)

– Install toothed belt, tension (adjusting timing)
  ⇒ Page 13-11.

– Check valve clearance and adjust ⇒ Page 15-28 (not for hydraulic tappets).

Note:

After installing new hydraulic bucket tappets the engine must not be started for approx. 30 minutes. The hydraulic compensation elements must settle (otherwise the valves may contact the piston).

Checking hydraulic bucket tappets

Note:

- *Only renew tappets complete (cannot be adjusted or serviced).*
- *Irregular valve noises when starting engine are normal.*

– Start the engine and run until radiator fan has cut-in once.

– Increase engine speed to approx. 2500 rpm for 2 minutes.

If the hydraulic bucket tappets are still noisy, locate defective tappet as follows:

– Remove cylinder head cover.

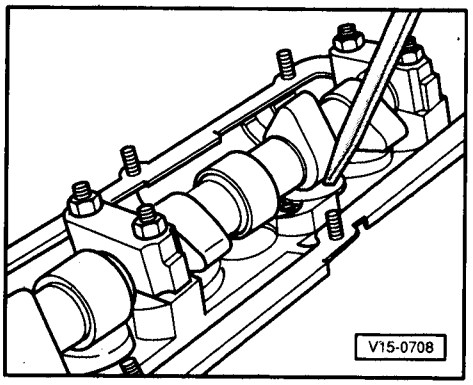

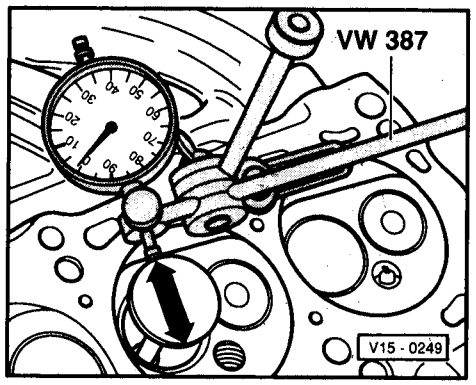

- Rotate the crankshaft at securing bolt, clockwise until the cam of the tappet to be checked is pointing upwards.

- Determine clearance between cam and bucket tappet.

- If the clearance exceeds 0.1 mm, replace bucket tappet. If the clearance measured is less than 0.1 mm or no clearance is perceptible, proceed with check as follows:

◄ - Press tappet down with a wooden or plastic wedge. If free travel in excess of 0.1 mm is felt before contacting the valve stem, renew the tappet.

Note:

After the installing new tappets, the engine must not be started for approx. 30 minutes. Hydraulic compensation elements must settle (otherwise valves may contact pistons).

Checking valve guides

◄ - Insert valve in guide. Stem end must be flush with guide. Due to the difference in stem dimensions, ensure that only an inlet valve is used in the inlet guide and an exhaust valve in the exhaust guide.

- Determine rock.
  Wear limit:
  Inlet valve = 1.0 mm
  Exhaust valve = 1.3 mm

Renewing valve guides

- Clean and check cylinder head. Cylinder heads whose valve seat inserts can no longer be reworked or cylinder heads which are already at the minimum dimension are not suitable for renewing valve guides.
- Press out the worn valve guides using 10-206, from the camshaft side (service version valve guides with shoulder are pressed out from the combustion chamber side).
- Coat new guides with oil and, press in using 10-206, from the camshaft side, until shoulder makes contact with cold cylinder head.

Note:

When the shoulder on guide makes contact with the cylinder head, the press pressure must not exceed 1.0 t, otherwise the shoulder may break off.

- Ream out the guides using hand reamer 10-215. using plenty of cutting fluid.
- Reworking valve seats ⇒ Page 15-17.

Renewing valve stem oil seals

(with cylinder head installed)

- Remove camshaft ⇒ Page 15-21.
- Remove the bucket tappets (do not interchange) and place with the contact surfaces downwards.
- Remove spark plugs.
- Move the piston of the cylinder concerned to "Bottom Dead Centre" (BDC).

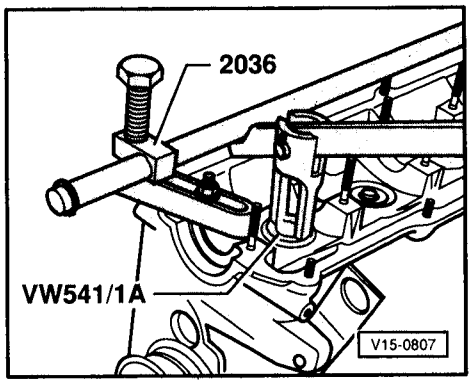

◄ - Install assembly device 2036 and adjust mounting to height of studs
- Screw pressure hose VW 653/3 into spark plug threads and continually exert pressure of
  at least 6 bar
- Remove valve springs with assembly lever VW 541/1A.

Note:

Release seized valve cotters by striking assembly lever with a light hammer blow.

- Pull off valve stem seal with 3047A

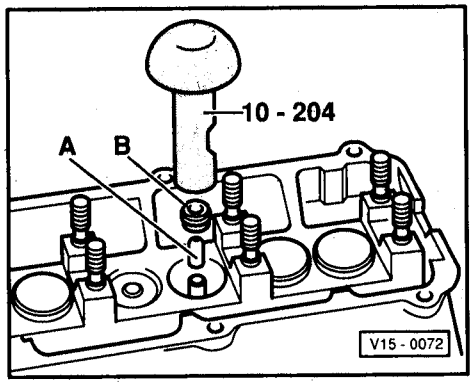

◄ - To prevent damage to new valve stem seals, fit plastic sleeve -A- onto valve stem.

- Oil valve stem seal -B-, place in press tool 10-204 and push down carefully onto valve guide.

Note:

After the installing new tappets, the engine must not be started for approx. 30 minutes. Hydraulic compensation elements must settle (otherwise valves may contact pistons).

Checking valve clearance and adjusting

(Not for hydraulic valve clearance compensation)

- Engine warm (coolant temperature above 35 °C)

Specification warm:
Inlet valve 0.20...0.30 mm
Exhaust valve 0.40...0.50 mm

After repairs to cylinder head the valve clearance can also be carried out on a cold cylinder head.

Specification cold:
Inlet valve 0.15...0.25 mm
Exhaust valve 0.35...0.45 mm

Note:

- ♦ If work on cylinder head has been carried out e.g. renewing and lapping in valves, renewing camshaft then check valve clearances with engine warm after 10 operating hours (only engines without hydraulic valve clearance compensation)

- Valve clearance adjusted using shims (3.00...4.25 mm thick). Shim thickness engraved on underside.
- When installing ensure that marking/size faces downwards e.g. into bucket tappet.
- Used shims may be reused, if no mechanical damage is present.
- Use container 10-212 to store shims.

– Turn crankshaft until cam pair of cylinder to be adjusted point evenly upwards.

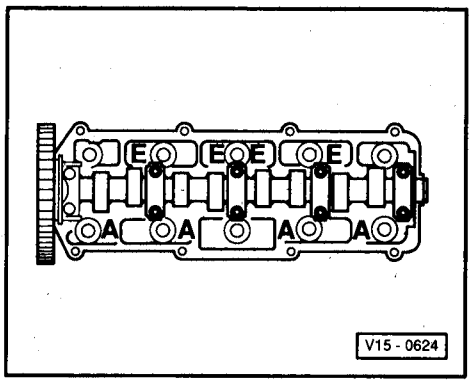

◄ – Checking valve clearance.
A = Exhaust valve
E = Inlet valve

If the tolerance is exceeded, then aim to adjust to middle figures.

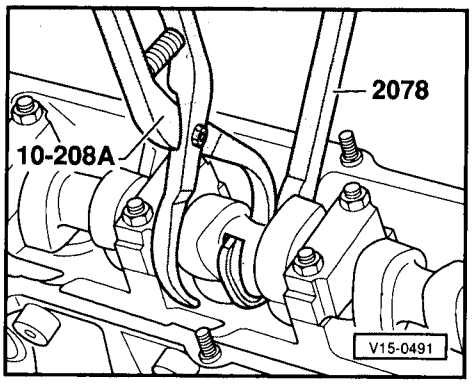

– Adjusting valve clearance:

◄ – Press bucket tappet down with depressor 2078.

– Lever out shim with pliers 10-208A.

– Insert shim required (Inscription faces downwards).

Removing and installing parts of lubrication system

Note:

If, when repairing an engine, a large quantity of swarf or fine metal particles are found in the engine oil caused e.g. by seizure of crankshaft and conrod bearings, the oil drillings must be very carefully cleaned and the oil cooler renewed to prevent subsequent damage.

Checking oil pressure ⇒ Page 17-6

Oil capacities[1]:

Without oil filter	3.0 ltr
With oil filter	3.5 ltr

[1] Capacity depends on shape of sump

Engine oil specification:

Use only engine oils which conform to VW Standard 500 00 or 501 01.
Only in exceptional circumstances: multigrade oils conforming to API-SF or SG.

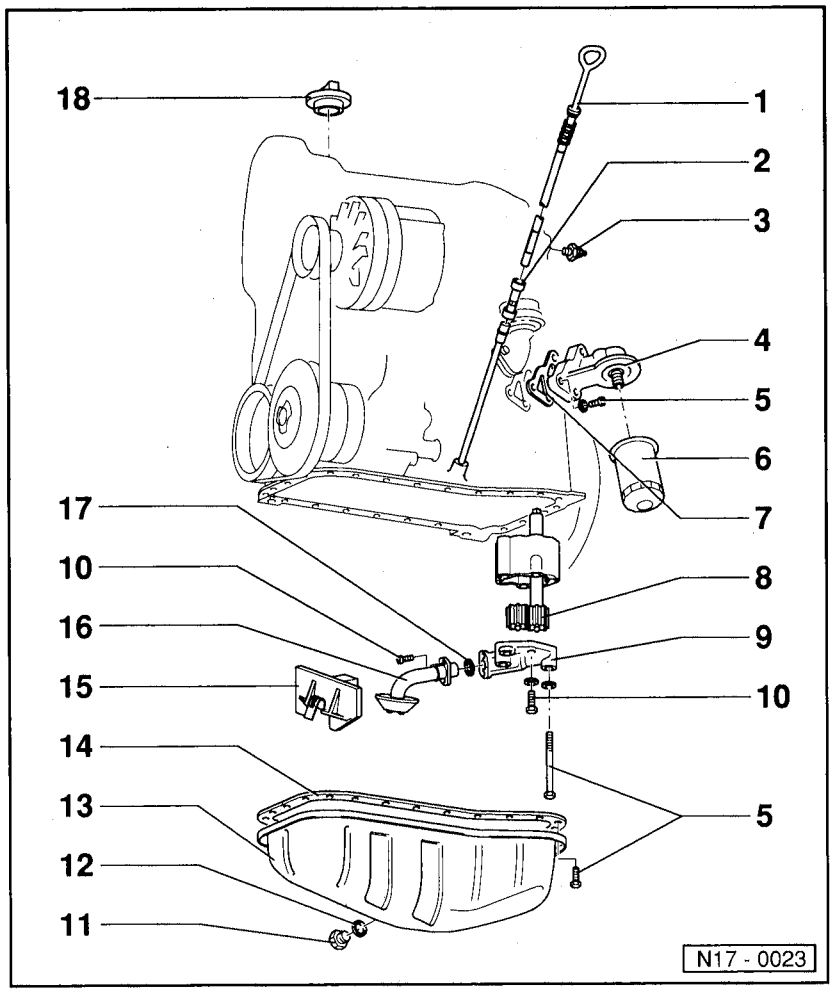

1 - **Dipstick**
- Quantity difference min. ... max.:
  Round dipstick approx. 1.0 ltr
  Flat dipstick approx. 0.75 ltr
- Oil level must never be over "max." marking

2 - **Dipstick guide**

3 - **0.3 bar oil pressure switch (F22), 25 Nm**
- Brown
- Checking ⇒ Page 17-6
- If leaking nip sealing ring open and renew
- Insert with sealing compound

4 - **Oil filter bracket**

5 - **20 Nm**
- Sump securing bolts: Loosen and tighten flywheel side with 3185

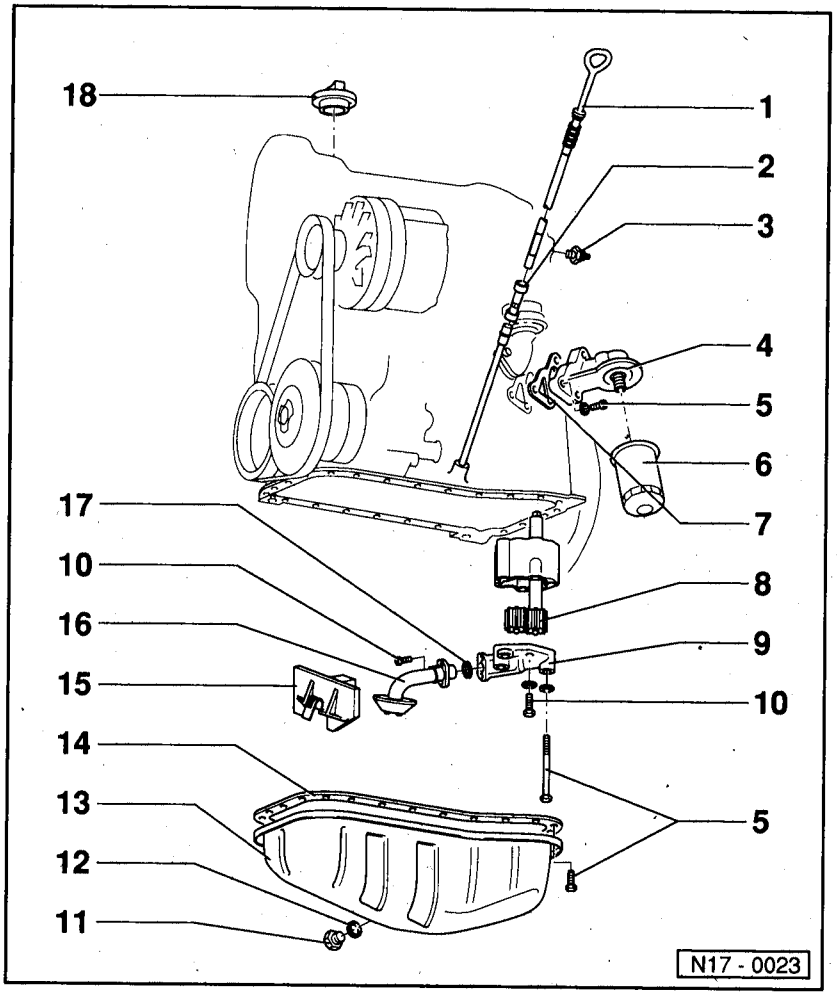

6 - **Oil filter**
- Loosen with strap wrench
- Tighten by hand
- Observe installation instructions on oil filter

7 - **Gasket**
- Renew

8 - **Oil pump gears**
- Checking backlash ⇒ Fig. 1
- Checking axial play ⇒ Fig. 2
- Width of gears:
  26 mm for adjustable bucket tappets
  30 mm for hydraulic bucket tappets

9 - **Oil pump with pressure relief valve**

10 - **10 Nm**

11 - **Oil drain plug, 30 Nm**

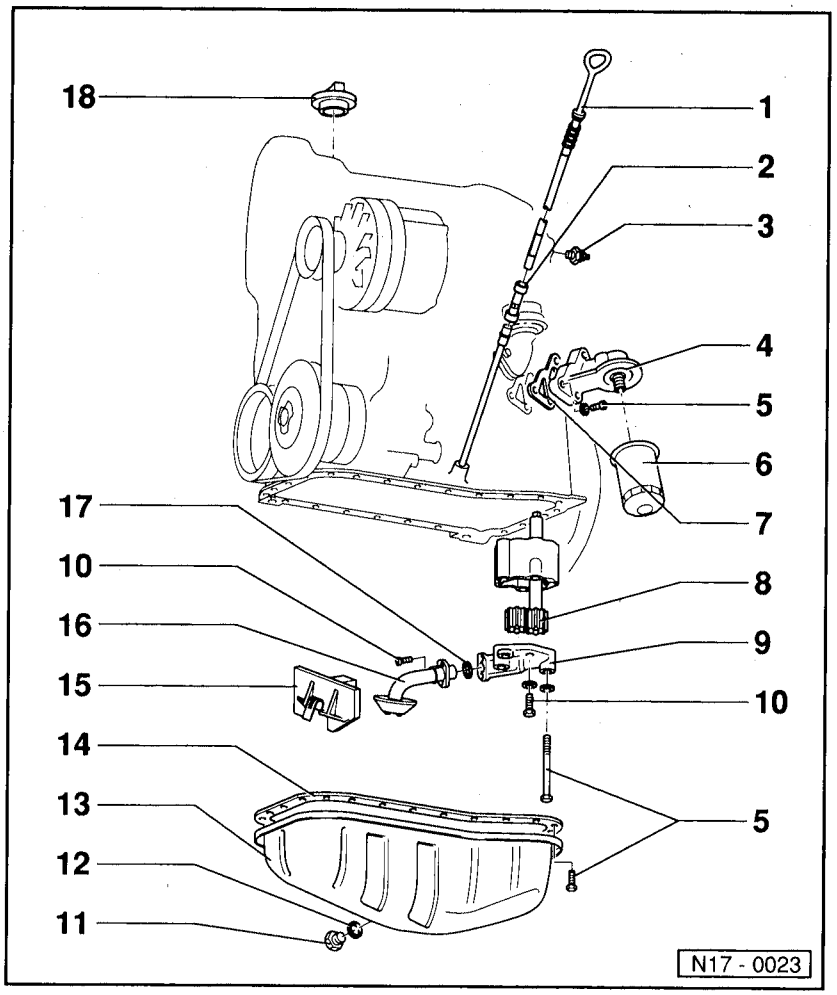

12 - **Seal**
- Renew

13 - **Sump**
- Clean sealing surface before installing

14 - **Sump gasket**
- Renew
- Do not stick on
- Ensure positioned correctly

15 - **Baffle plate**

16 - **Suction pipe**
- Clean strainer if dirty

17 - **O-ring**
- Renew if damaged

18 - **Cover cap**
- Renew seal if damaged

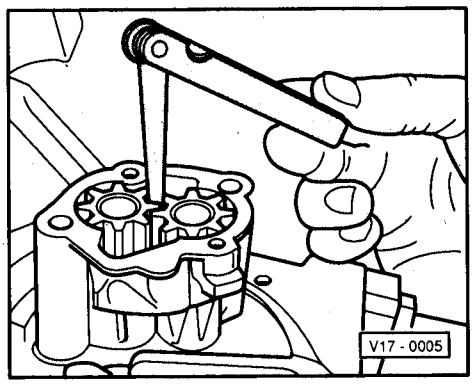

◄ **Fig. 1 Checking oil pump backlash**

New: 0.05 mm

Wear limit: 0.20 mm

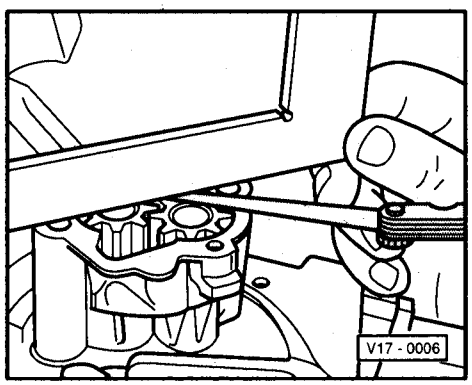

◄ **Fig. 2 Checking oil pump axial play**

Wear limit: 0.15 mm

Checking oil pressure and oil pressure switch

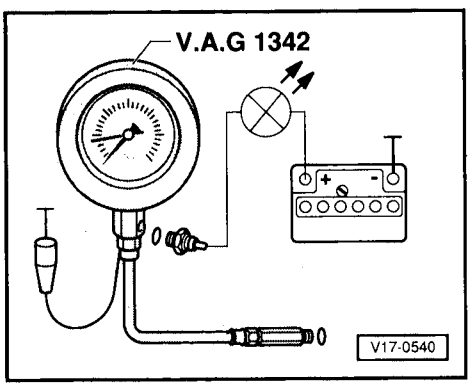

◄ - Remove 0.3 bar oil pressure switch (brown insulation) and screw into the tester.

- Screw the tester into the cylinder head in the place of the oil pressure switch.

- Connect brown wire from tester to earth (–).

- Connect diode test lamp V.A.G 1527 using aux. cables from V.A.G 1594 to battery positive (+) and 0.3 bar oil pressure switch (F22).

LED must light up.

- Start engine and slowly increase engine speed.

At a pressure of 0.15...0.45 bar the LED must go out.

- Otherwise, renew oil pressure switch.

- Increase engine speed further.

At 2000 rpm and an engine oil temperature of 80°C, the pressure should be a minimum of 2.0 bar.

Renewing crankshaft oil seal - pulley end

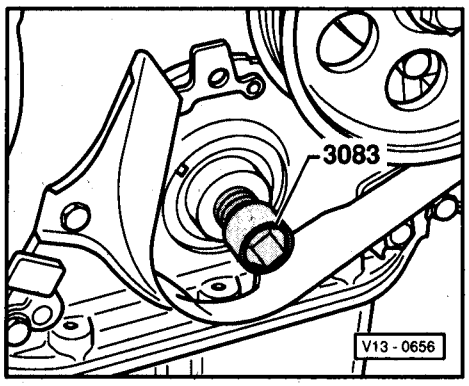

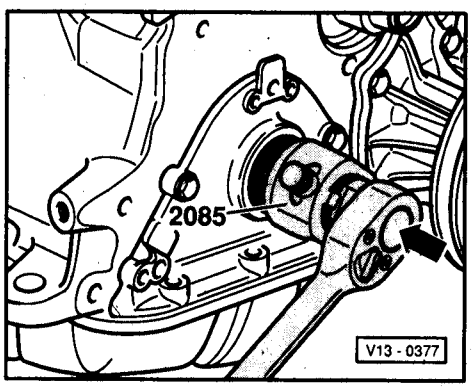

Removing

- Remove toothed belt ⇒ Page 13-11.
- Remove crankshaft sprocket. To do this, lock sprocket with counter hold tool 3099.
- ◄ To guide the oil seal extractor, screw hexagon socket head bolt from 3083 into crankshaft onto stop.
- Unscrew inner part of oil seal extractor 2085 two turns (approx. 3 mm) out from outer part and lock with knurled screw.
- ◄ Oil threaded head of oil seal extractor, align and forcibly screw as far as possible into the oil seal.
- Loosen knurled screw and screw inner part against crankshaft until oil seal has been pulled out.

Installing

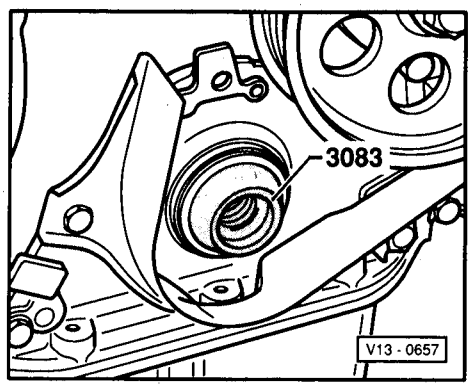

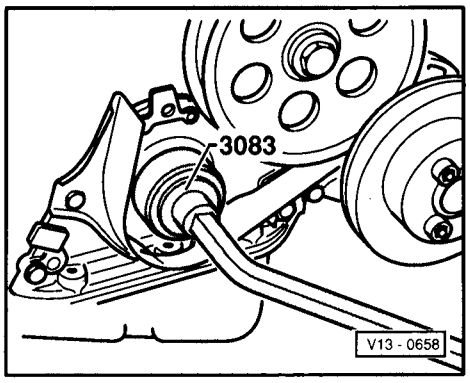

- Lightly oil, oil seal sealing lip.
- ◄ Place guide sleeve from 3083 onto crankshaft journal.
- Slide oil seal over guide sleeve.
- ◄ Press oil seal in onto stop with press sleeve from 3083.
- Install toothed belt ⇒ Page 13-11.

Crankshaft dimensions

(Dimensions in mm)

Honing dimension	Crankshaft main bearing journal Ø	Connecting rod bearing journal Ø
Original size	-0.022 54.00 -0.042	-0.022 47.80 -0.042
1st undersize	-0.022 53.75 -0.042	-0.022 47.75 -0.042
2nd undersize	-0.022 53.50 -0.042	-0.022 47.30 -0.042
3rd undersize	-0.022 53.25 -0.042	-0.022 47.05 -0.042

Producing ignition timing mark on flywheel

On the replacement part flywheel or drive plate there is only a TDC marking -O-.

If a flywheel or drive plate is to be replaced then the relevant timing mark must be remade.

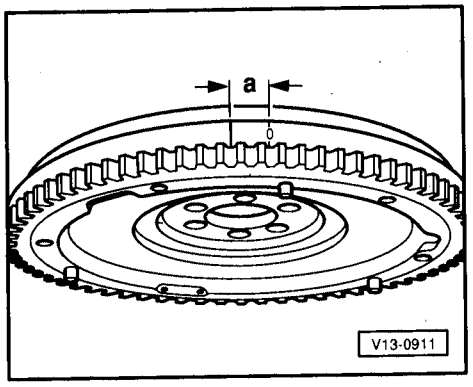

◄ – Scribe ignition timing mark a = 21 mm to left of TDC mark. To do this measure along circumference.

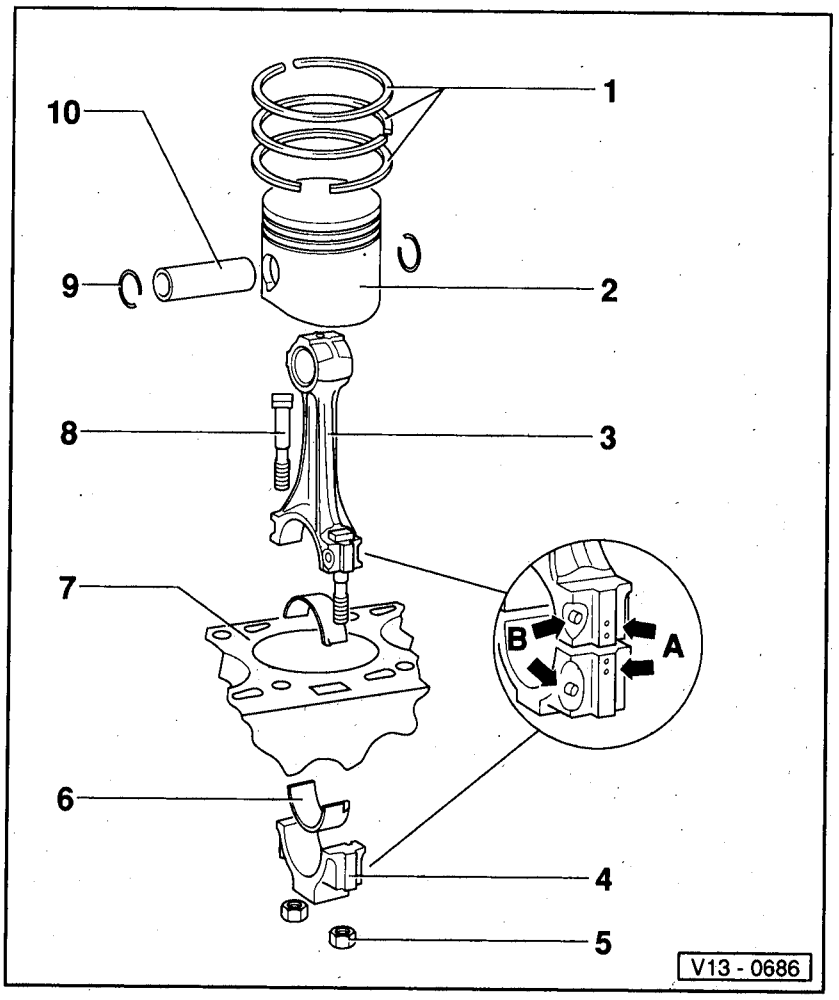

Dismantling and assembling pistons and conrods

1 - Piston rings
- Offset gaps 120°
- Remove and install with piston ring pliers
- Marking "TOP" towards piston crown
- Checking ring gap ⇒ Fig. 1
- Checking side clearance ⇒ Fig. 2

2 - Piston
- Checking ⇒ Fig. 3
- Mark fitting position and cylinder number
- Arrow on piston crown points to belt pulley end
- Install with piston ring clamp
- Characteristics ⇒ Fig. 4

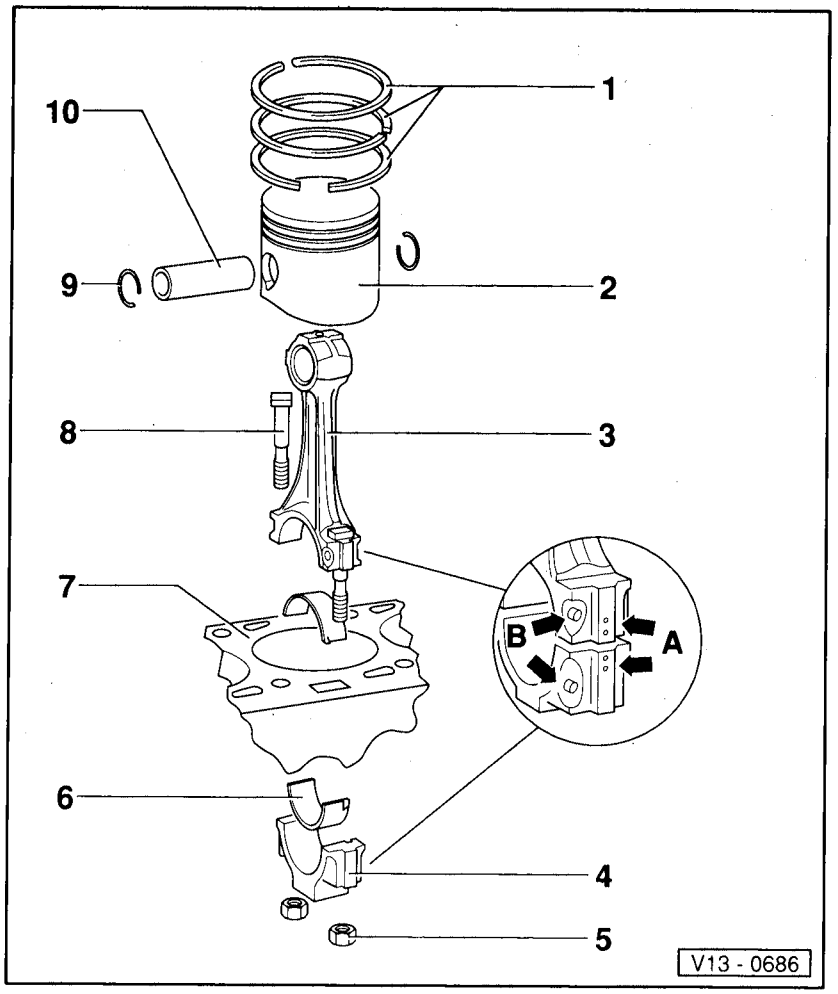

3 - Conrod
- Renew in sets only
- Mark with cylinder number -A-
- Installation position:
  marks -B- face towards belt pulley end

4 - Conrod cap
- Installation position:
  markings -B- face towards pulley end

5 - 30 Nm + ¼ turn (90°) turn further
- Oil thread and head contact surface
- When measuring radial clearance tighten to 30 Nm, do not turn further

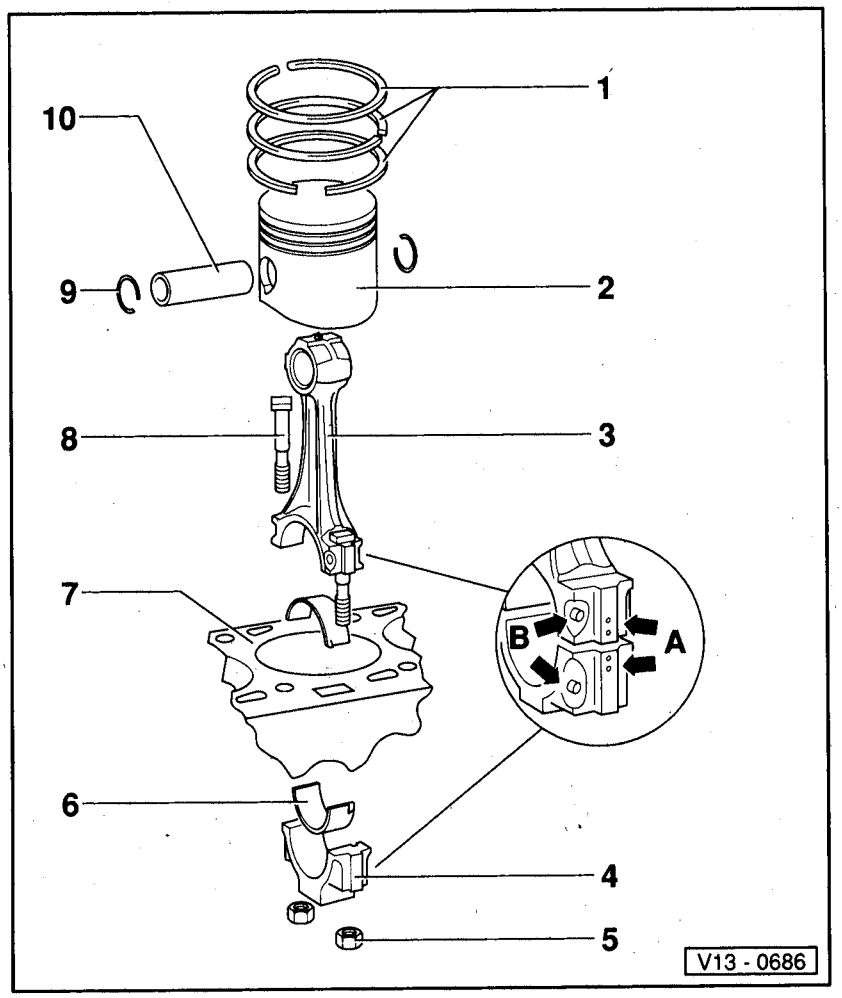

6 - Bearing shell

- Note installation position
- Do not interchange used bearing shells
- Ensure retaining lugs are firmly seated
- Axial play:
  New: 0.5...0.31 mm
  Wear limit 0.37 mm
- Measure radial play with plastigage:
  New: 0.1...0.06 mm
  Wear limit: 0.12 mm
  Do not rotate crankshaft when measuring radial play.

7 - Cylinder block

- Checking cylinder bores
  ⇒ Fig. 5
- Piston and cylinder dimensions
  ⇒ Page 13-35

8 - Conrod bolt

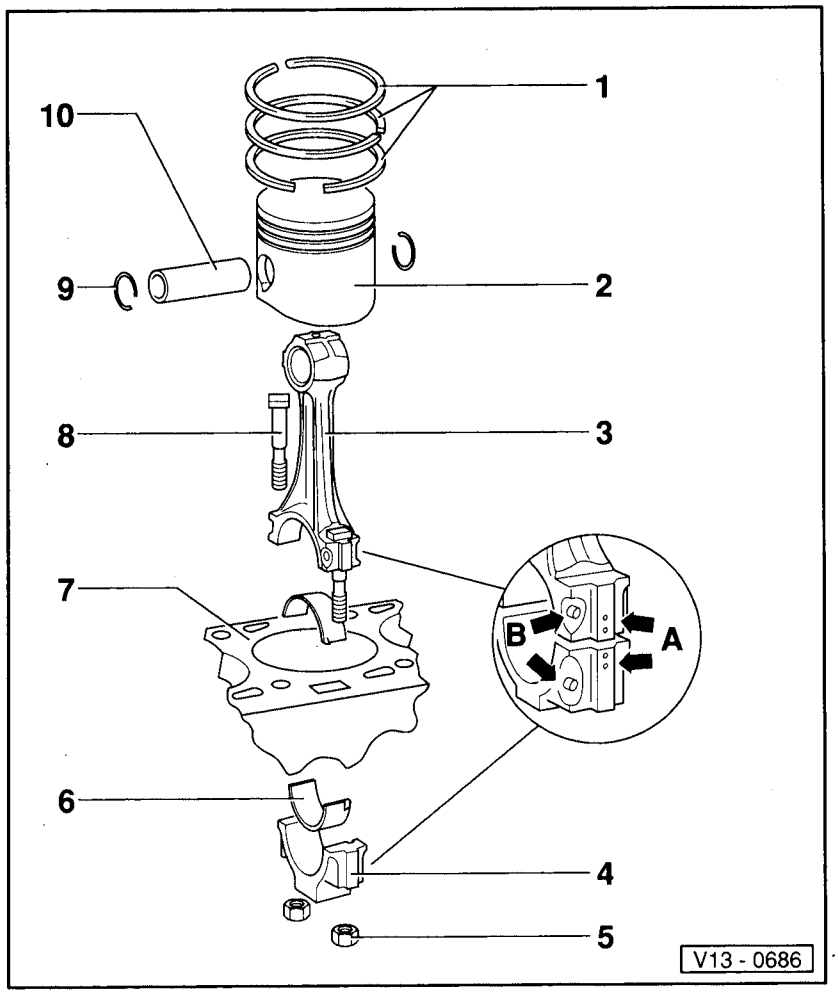

9 - Circlip

10 - Piston pin

- If tight, heat piston to approx. 60°C
- Use VW 222a to remove and install

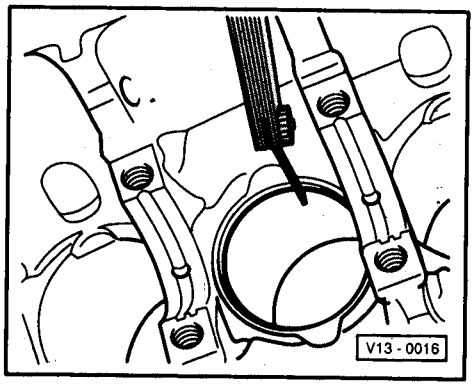

◄ **Fig. 1 Piston ring - Checking ring gap**

- Slide ring in squarely from above down to bottom end of cylinder approx. 15 mm from bottom edge.

Piston Ring	Ring gap	
	New	Wear limit
Compression rings	0.30...0.45	1.0
Oil scraper ring	0.25...0.40	1.0

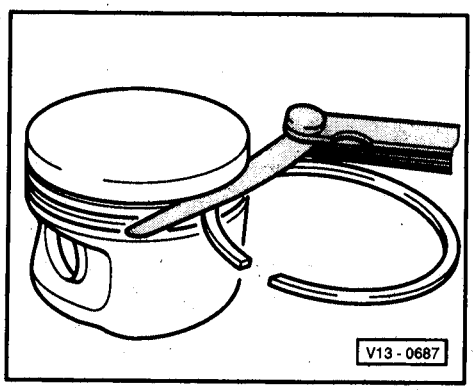

◄ **Fig. 2 Piston rings - Checking side clearance**

Clean the ring groove before checking.

Piston Ring	Side clearance	
	New	Wear limit
Compression rings	0.02...0.05	0.15
Oil scraper ring	0.02...0.05	0.15

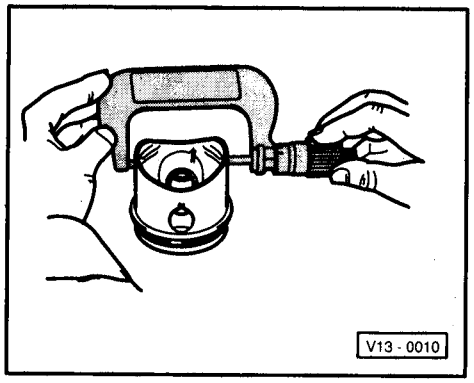

◄ **Fig. 3 Checking pistons**

Measure piston approx. 15 mm from skirt and offset 90° to piston pin.

Deviation from nominal dimension
max. 0.04 mm.

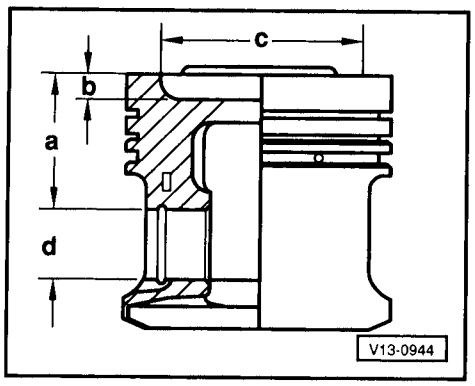

◄ **Fig. 4 Piston characteristics**

a = 22.2 mm

b = 8.1 mm

c = 81.0 mm Ø

d = 20.0 mm Ø

During repairs to engine, only same version pistons and piston rings and pistons of same weight class may be installed.

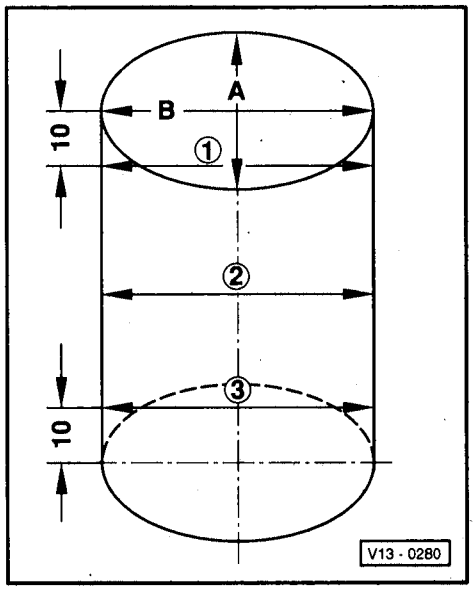

◄ **Fig. 5 Checking cylinder bores**

- Measure at 3 locations, across -A- and in line -B-.
- Use internal dial gauge 50...100 mm.
- Deviation from nominal dimension max. 0.08 mm.

Note:

Cylinder bore measurement must not be done when the cylinder block is mounted on repair stand with adapter VW 540, as this can cause incorrect measurements.

Piston and cylinder dimensions

Honing Size		Piston Ø	Cylinder bores Ø
Basic size	mm	80.98	81.01
1st oversize	mm	81.23	81.26
2nd oversize	mm	81.48	81.51

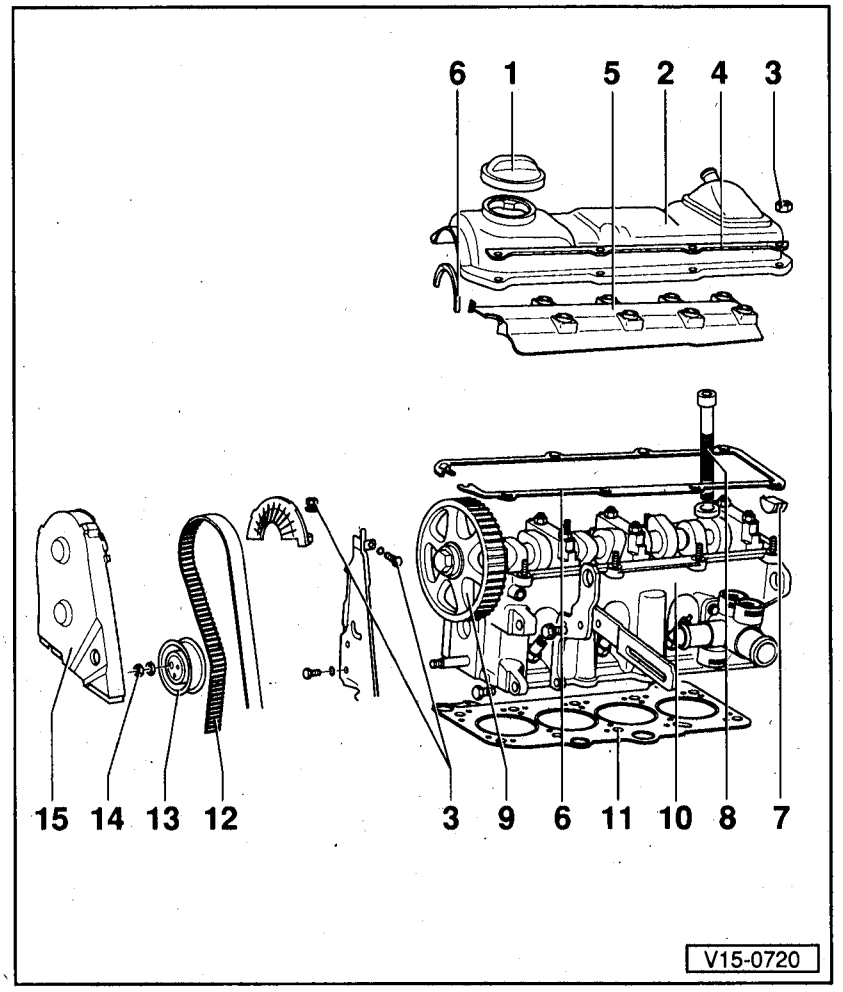

Removing and installing cylinder head

Checking compression pressures
⇒ Page 15-9

Note:

- *If an exchange cylinder head with camshaft is installed then adjusting valve clearance is not required, but the contact surfaces between the bucket tappets and the cam face must be lubricated after installing the head.*
- *The plastic caps supplied for protecting the open valves must not be removed until immediately prior to fitting the cylinder head.*
- *When replacing the cylinder head, fill complete system with fresh coolant.*

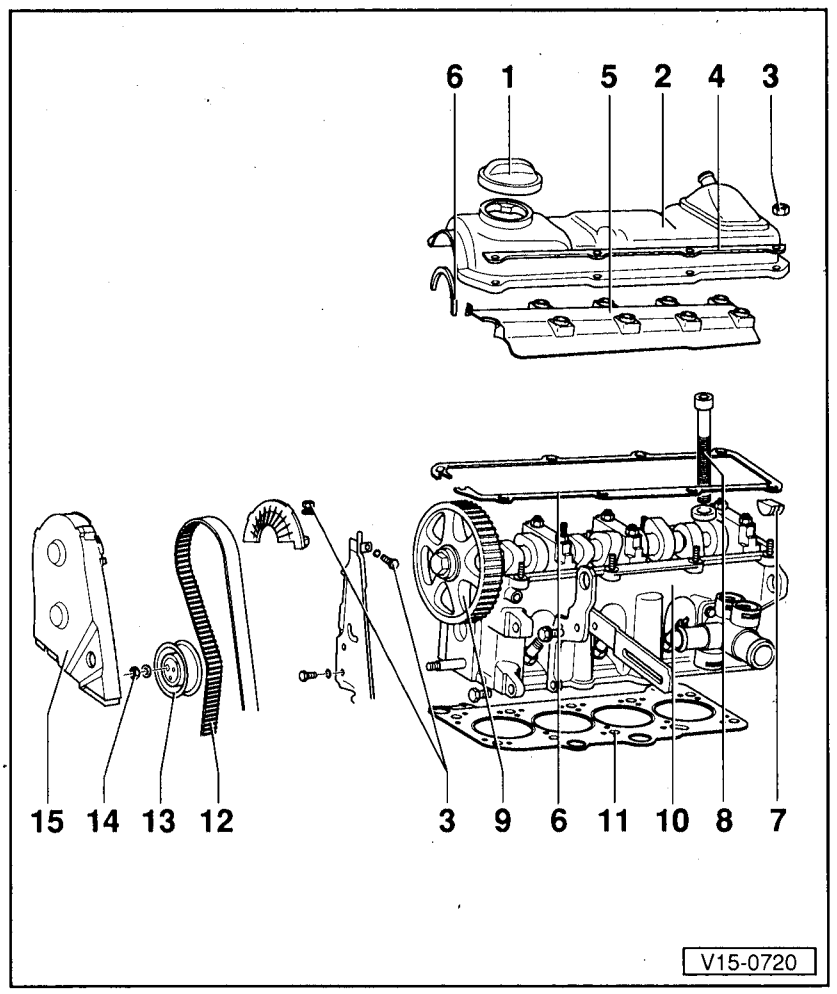

1 - **Cover cap**
  - Renew seal if damaged

2 - **Cylinder head cover**

3 - **10 Nm**

4 - **Reinforcing strip**

5 - **Oil deflector**
  - Only with hydraulic bucket tappets

6 - **Cylinder head cover gasket**
  - Renew

7 - **Sealing plug**
  - Renew

8 - **Cylinder head bolts**
  - Note sequence when loosening and tightening ⇒ Page 15-5, Removing and installing cylinder head.
  - Renew

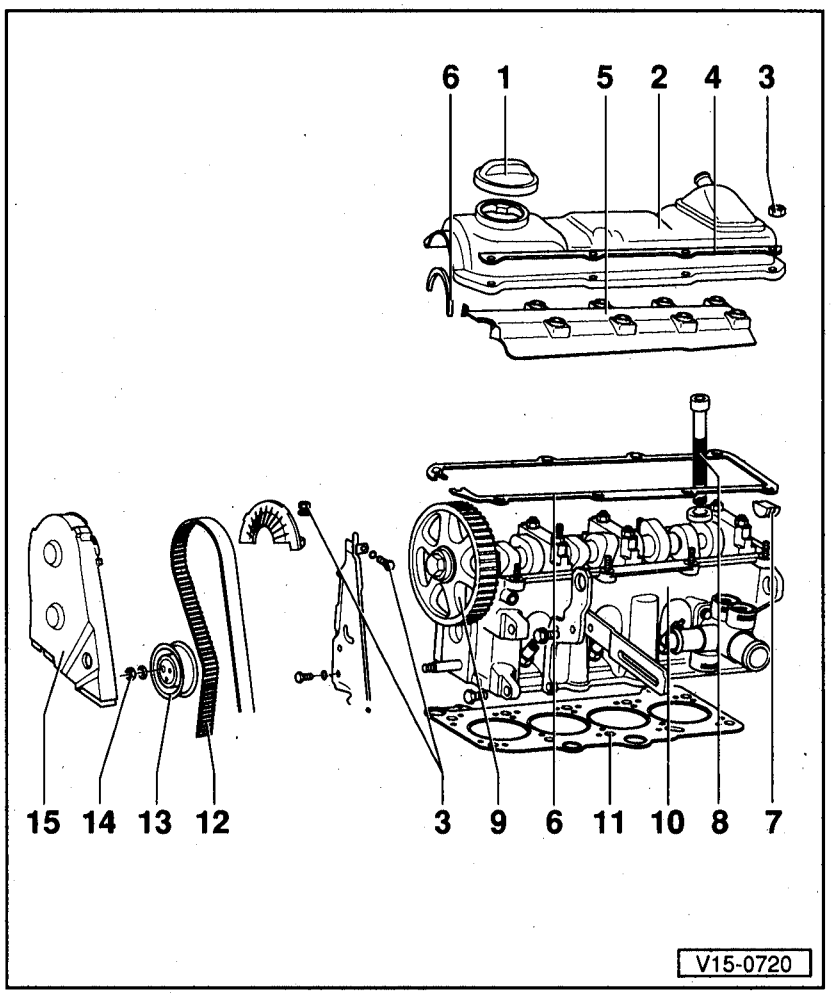

9 - Camshaft sprocket
- Observe position when installing toothed belt ⇒ Page 13-11, Removing, installing and tensioning toothed belt.

10 - Cylinder head
- Checking for distortion ⇒ Fig. 1
- Removing and installing ⇒ Page 15-5
- After replacing, fill complete system with new coolant

11 - Cylinder head gasket
- Renew
- When installing note centralising pins in cylinder head
- Marking "Oben" (Top) must face towards cylinder head
- After replacing, fill the entire system with new coolant

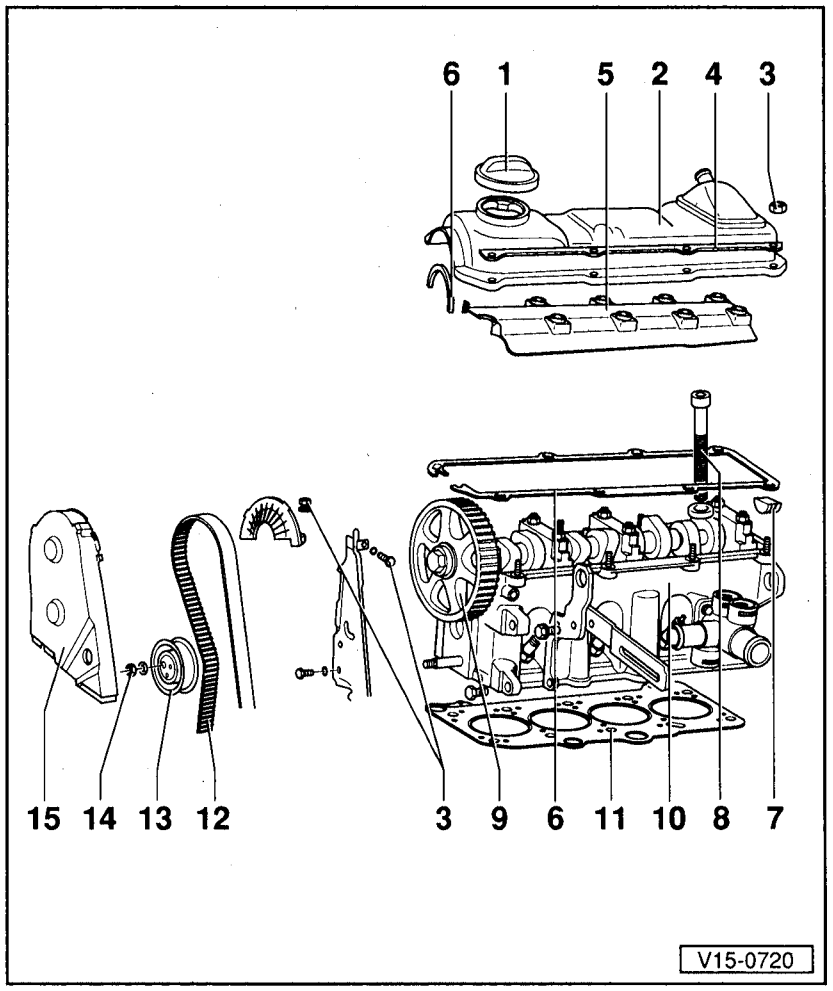

12 - Toothed belt
- Before removing mark direction of rotation
- Check for wear
- Do not kink
- Removing, installing and tensioning ⇒ Page 13-11

13 - Tensioning roller

14 - 45 Nm

15 - Upper toothed belt guard
04.88 ➢ as illustrated
➢ 03.88 metal version

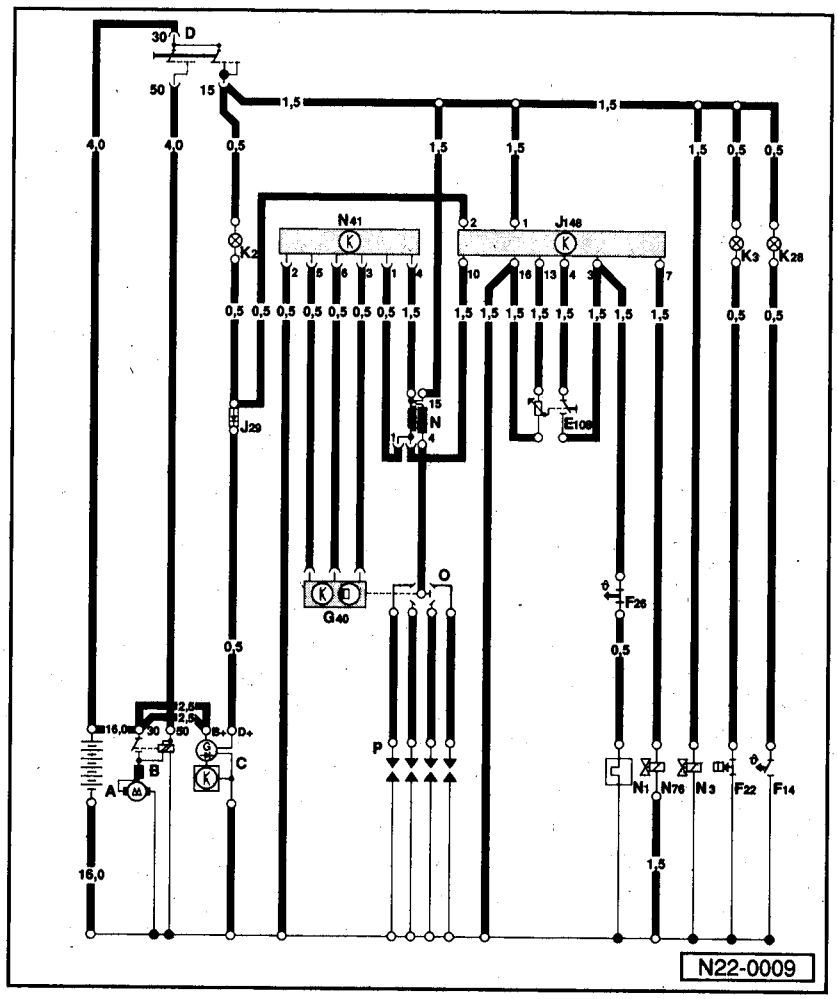

Current flow diagram

Engine code 026.2, ➤10.87

Note:

Cross section details are minimum sizes. Larger cross sections are unit dependant and must be observed in cases of repair.

A	–	**Battery**
B	–	**Starter**
C	–	**Alternator**
D	–	**Ignition/starter switch**
E108	–	**Outer potentiometer**
F14	–	**Coolant temperature regulator switch (110°C)**
F22	–	**Oil pressure switch (0.3 bar)**
F26	–	**Automatic choke thermo switch**
G40	–	**Hall sender**

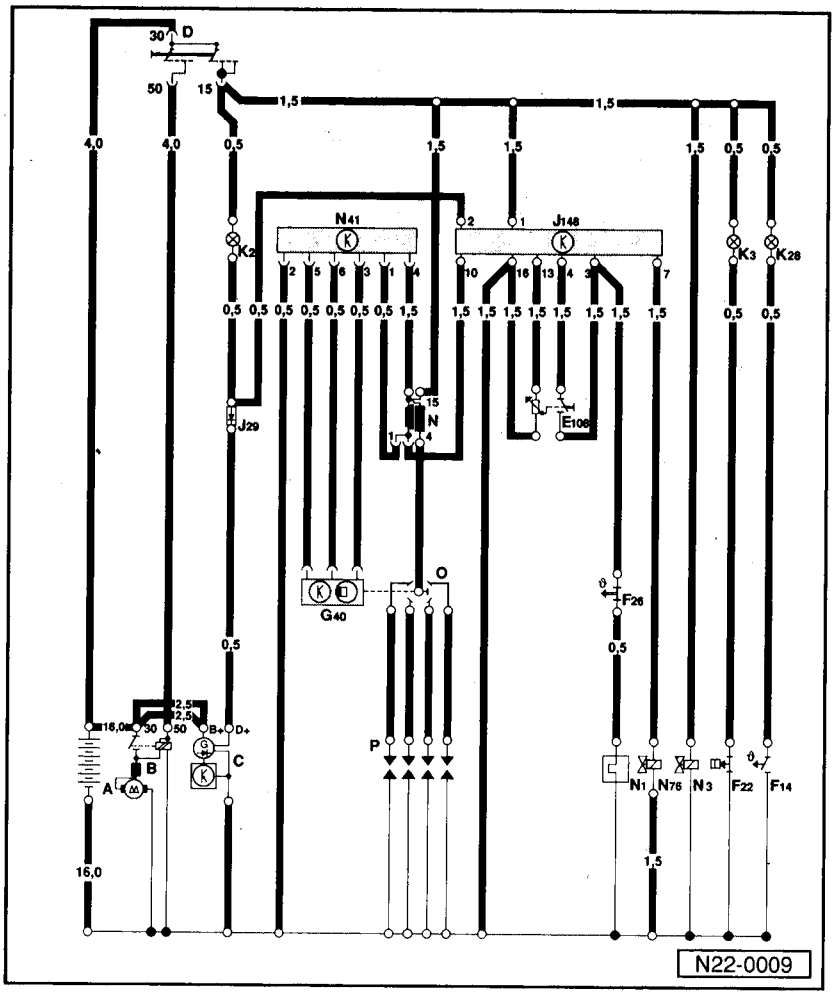

J29	–	**Blocking diode**
J148	–	**Engine speed regulator control unit**
K2	–	**Alternator warning lamp**
K3	–	**Oil pressure warning lamp**
K28	–	**Coolant temperature warning lamp**
N	–	**Ignition coil**
N1	–	**Carburettor automatic choke**
N3	–	**Bypass air cut-off valve**
N41	–	**TCI-H switch unit**
N76	–	**Lift magnet**
O	–	**Distributor**
P	–	**Spark plug connector**

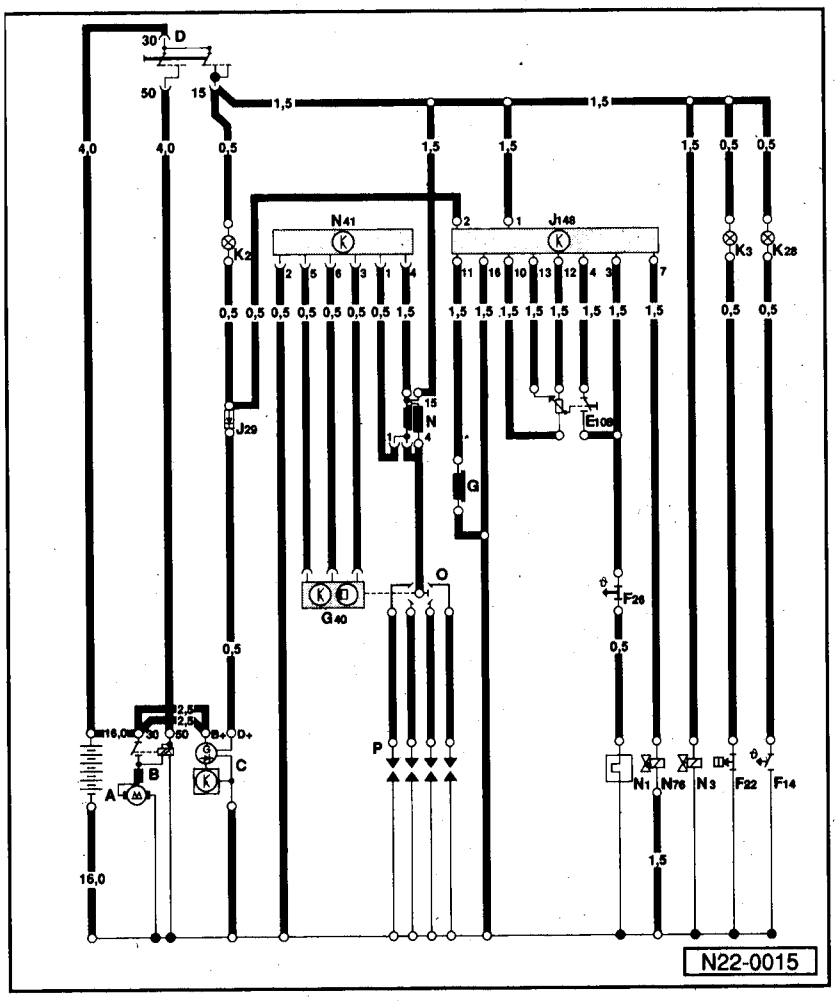

Current flow diagram

Engine code 026.2
1187 to 09.89

Note:

Cross section details are minimum sizes. Larger cross sections are unit dependant and must be observed in cases of repair.

A	–	Battery
B	–	Starter
C	–	Alternator
D	–	Ignition/starter switch
E108	–	Outer potentiometer
F14	–	Coolant temperature regulator switch (110°C)
F22	–	Oil pressure switch (0.3 bar)
F26	–	Automatic choke thermo switch
G40	–	Hall sender
G	–	Engine speed sender

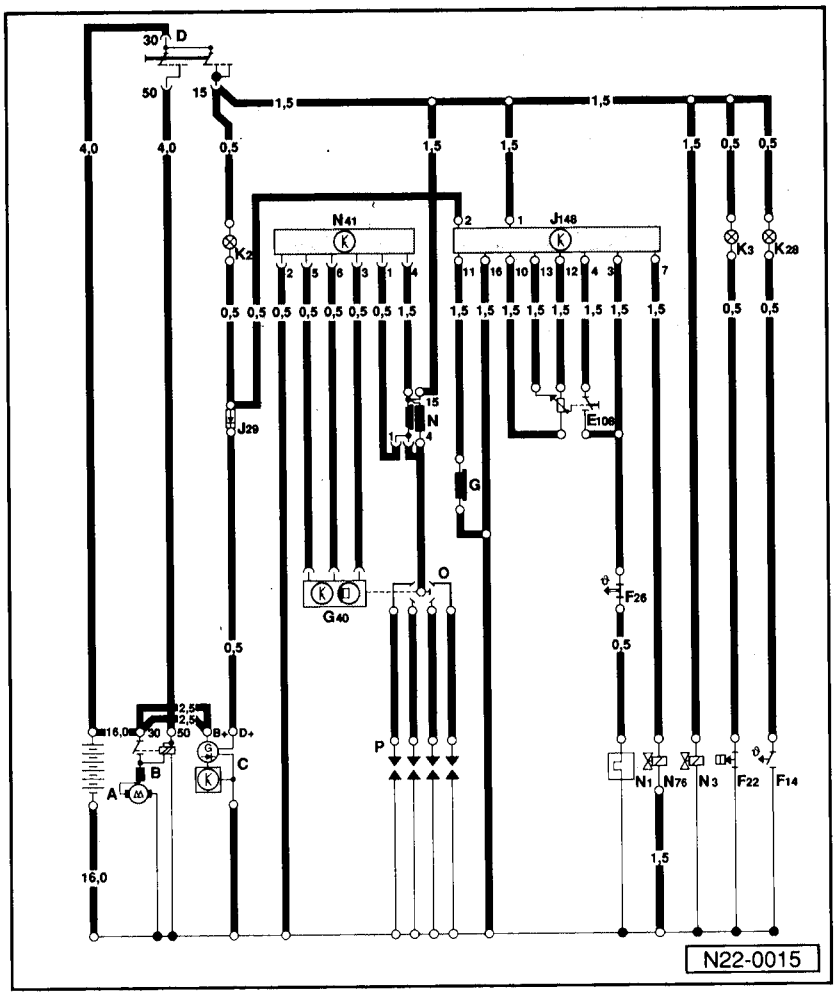

J29	–	Blocking diode
J148	–	Engine speed regulator control unit
K2	–	Alternator warning lamp
K3	–	Oil pressure warning lamp
K28	–	Coolant temperature warning lamp
N	–	Ignition coil
N1	–	Carburettor automatic choke
N3	–	Bypass air cut-off valve
N41	–	TCI-H switch unit
N76	–	Lift magnet
O	–	Distributor
P	–	Spark plug connector

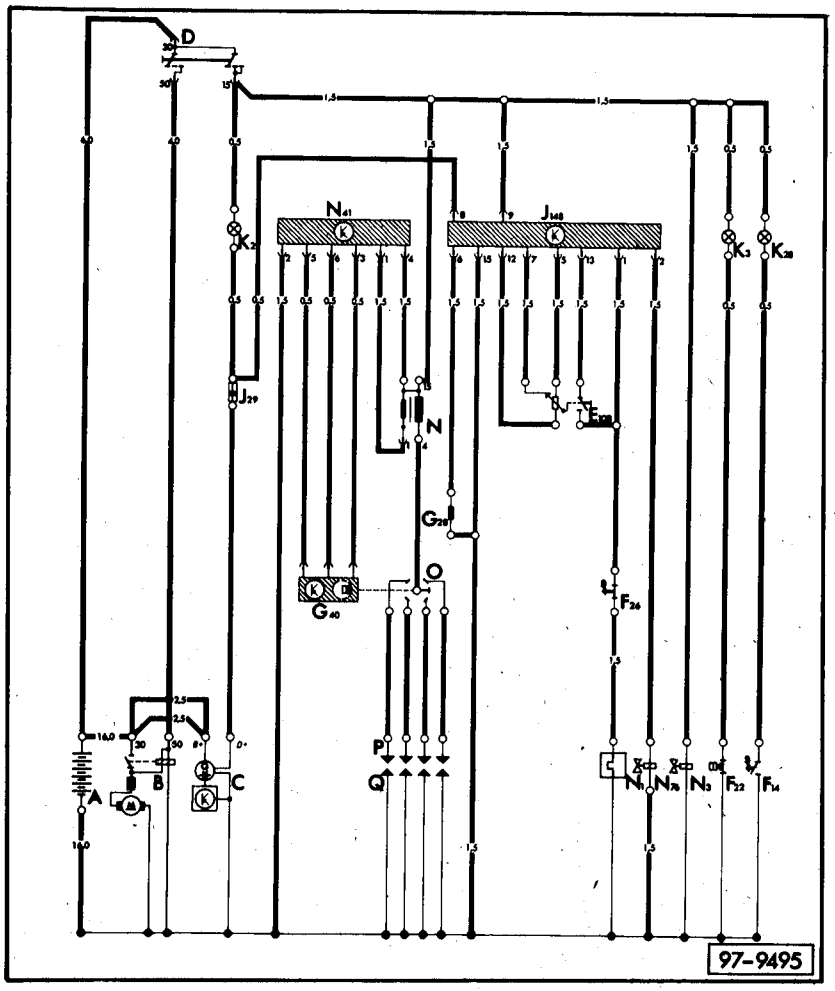

Current flow diagram

Engine code 026.2
10.89 ➢, ADF

Control unit (J148) connector contact assignment ⇒ Page 22-59.

Note:

Cross section details are minimum sizes. Larger cross sections are unit dependant and must be observed in cases of repair.

A	–	**Battery**
B	–	**Starter**
C	–	**Alternator**
D	–	**Ignition/starter switch**
E108	–	**Speed regulator outer potentiometer (10 kΩlin)**
F14	–	**Coolant temperature regulator switch (110°C)**
F22	–	**Oil pressure switch (0.3 bar)**
F26	–	**Automatic choke thermo switch**

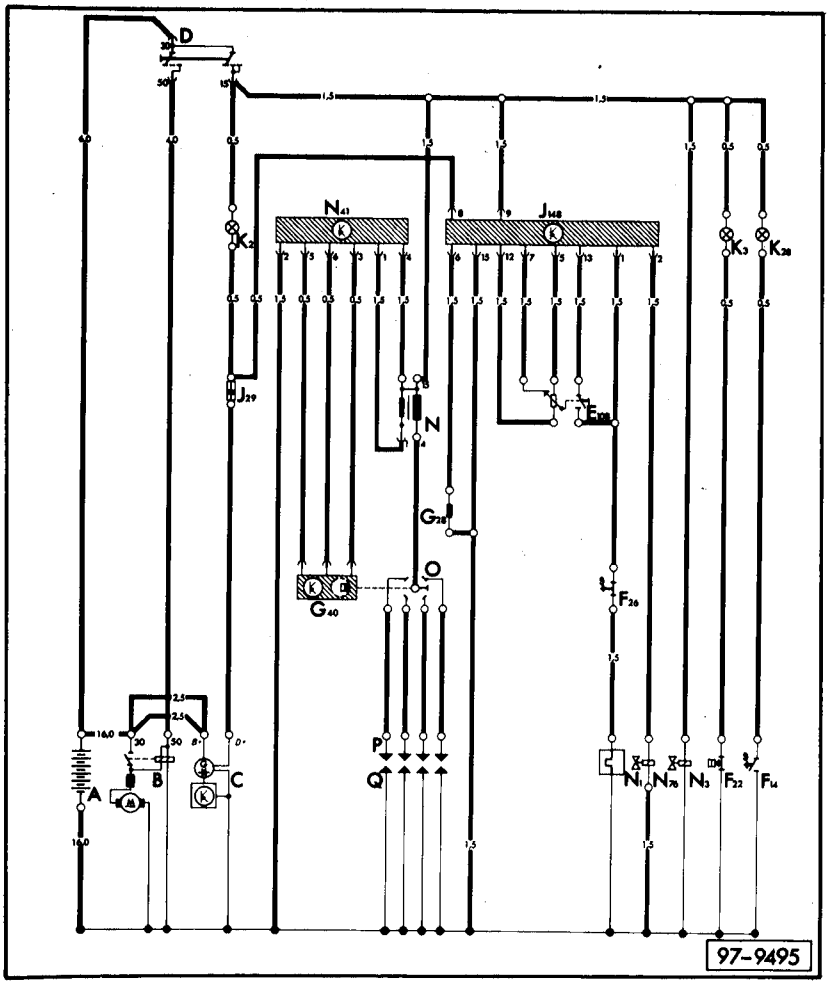

G28	–	**Engine speed sender**
G40	–	**Hall sender**
J29	–	**Blocking diode**
J148	–	**Engine speed regulator control unit**
K2	–	**Alternator warning lamp**
K3	–	**Oil pressure warning lamp**
K28	–	**Coolant temperature warning lamp**
N	–	**Ignition coil**
N1	–	**Carburettor automatic choke**
N3	–	**Bypass air cut-off valve**
N41	–	**TCI-H switch unit**
N76	–	**Lift magnet**
O	–	**Distributor**
P	–	**Spark plug connector**
Q	–	**Spark plugs**

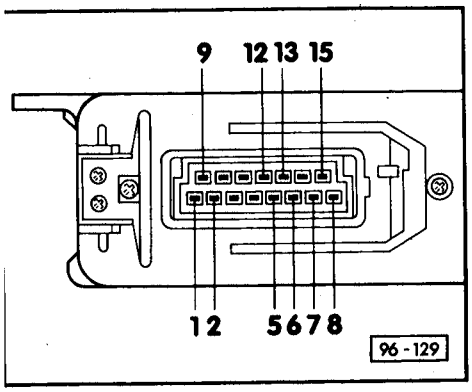

◄ **Fig. 1 Control unit (J148) connector contact assignment**

Testing alternator and voltage regulator

Checks with digital multimeter V.A.G 1315A

(45 A, 65 A alternator)

- V-belt tension, alternator security, wire routing and earth strap connections OK.

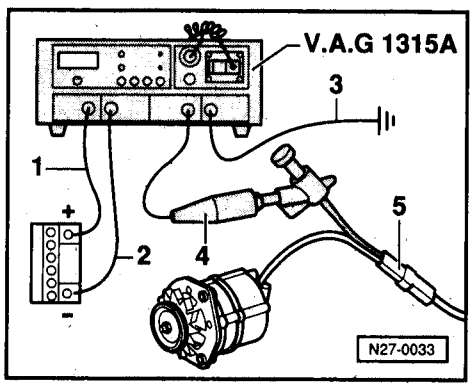

- Engine oil temperature at least 60 °C

◄ – Connect digital multimeter V.A.G 1315A:

1 - Red terminal to battery positive (+)

2 - Black terminal to battery negative (–)

3 - Black terminal to vehicle earth

4 - Red terminal to test probe

5 - Test probe to blue D+ wire on connector in engine compartment

– Operate button for alternator test.

Measuring voltage 8...12 Volt:

– Alternator defective (positive diode short circuit) renew diode plate.

Measuring voltage 0 Volt:

– Start engine and run at between 2000...3000 rpm. The red diode lighting up is of no consequence.

Green diode lights up:

Alternator OK.

Red diode lights up:

– Renew alternator voltage regulator first and then repeat measurement.

Green diode lights up:

Alternator OK voltage regulator was defective.

Red diode lights up:

– Alternator defective, check components and renew if necessary.

– Install old voltage regulator .

Checks with ballast resistance

(45 A, 65 A alternator)

- V-belt tension, alternator security, wire routing and earth strap connections OK.

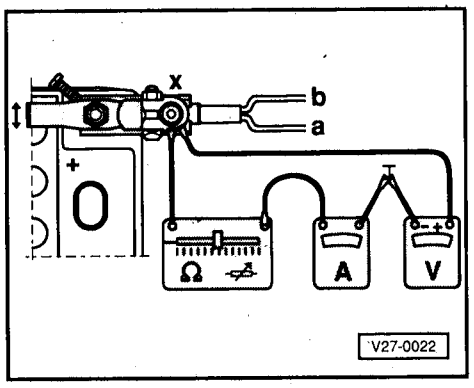

- Engine oil temperature at least 60 °C
- With ignition switched off, disconnect battery earthing strap.
- Disconnect positive terminal from battery positive terminal (+).
- Connect battery cut-out switch to battery positive (+) terminal.
- Connect the positive terminal to the battery cut-out switch.
- ◄ Connect ammeter, volt meter and ballast resistance as illustrated.
  a -To starter
  b -To relay plate terminal 30
  (wire fittment dependant on version)
  x - Battery cut-out switch
  A - Ammeter 0...100 amps
  V - Volt meter 0...30 volts
  Ω - Ballast resistance

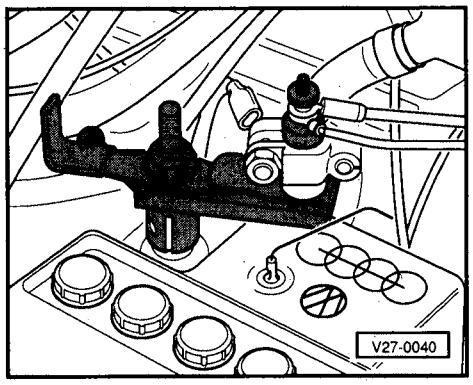

- ◄ Connect battery earthing strap, switch on battery cut-out switch.
- Start the engine and run at increased rpm.
- Set the ballast resistance so that the ammeter indicates about 20 amps.

- Open battery cut-out switch. (This separates the battery from the test circuit. The ballast current is now controlled only by the ballast resistor.)
- Regulate the ballast resistance until ammeter indicates
  30 Amps for 45 A alternator.
  45 Amps for 65 A alternator.
- Read off voltage on the voltmeter,
  Specification: 12.5...14.5 V
- If specifications are not attained, change alternator voltage regulator first and then repeat measurement.

Specifications are attained:

Alternator OK. voltage regulator was defective.

Specifications were not attained.

- Alternator defective. Check components, renew if necessary.
- Install old regulator again.

Checking starter

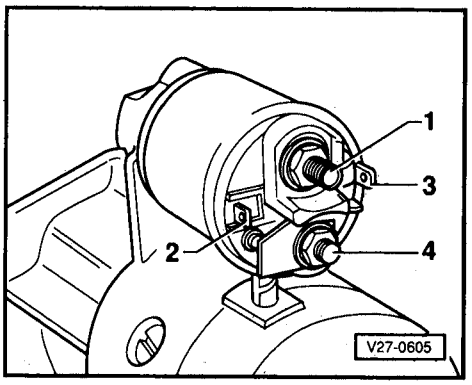

Cable connections to solenoid switch

◄ 1 - Terminal 30 - from battery (+)
2 - Terminal 50 - from ignition/starter switch
3 - Connection for field winding

Starter does not turn

- Battery charged
- Cable connections to solenoid switch and earth strap between engine, starter motor and the battery must be tight and must not be oxidised

Note:

Measure all voltages with voltmeter, e.g. V.A.G. 1315A or V.A.G. 1526.

- Measure voltage at starter solenoid switch -3- terminal 50.
  12 V version:
  Specification at least 8 V
- If the specified value is attained, measure voltage at the solenoid switch connection to the field winding -4-. (Ensure there is a good contact.)

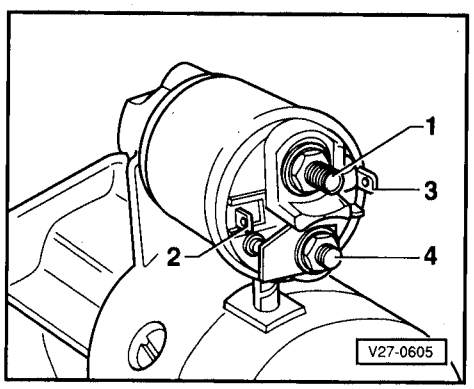

- If there is a voltage of (at least 8 V) present, service starter.
- Otherwise, renew solenoid switch.

◄ - If specification is not attained at solenoid switch -3- terminal 50, measure the voltage at ignition/starter switch terminal 50.

- If a voltage of (at least 8 V) is present, repair open circuit between the ignition/starter switch terminal 50 and starter terminal 50 (cable routing ⇒ Page 22-53, Current flow diagram).

- Otherwise, renew ignition/starter switch.

Starter turns too slowly and does not crank engine

- Engine filled with oil appropriate to ambient temperatures during the winter season.
- V-belt tension OK.
- Battery charged
- Cable connections to battery OK. (no voltage loss due to loose or oxidised connections)
  - Operate starter.

- If starter does not crank the engine, disconnect the battery earth strap.

- Clean and tighten connections to starter and earth strap (between engine and unit). (Do not loosen earth strap on unit.)

- Connect battery earth strap.

- Operate starter.

- If the starter does not crank the engine, the following faults may be present:

♦ Insufficient contact between the carbon brushes and the commutator

- Renew the carbon brushes and clean carbon brush guides.

♦ Commutator scored, burnt or soiled

- Renew armature.

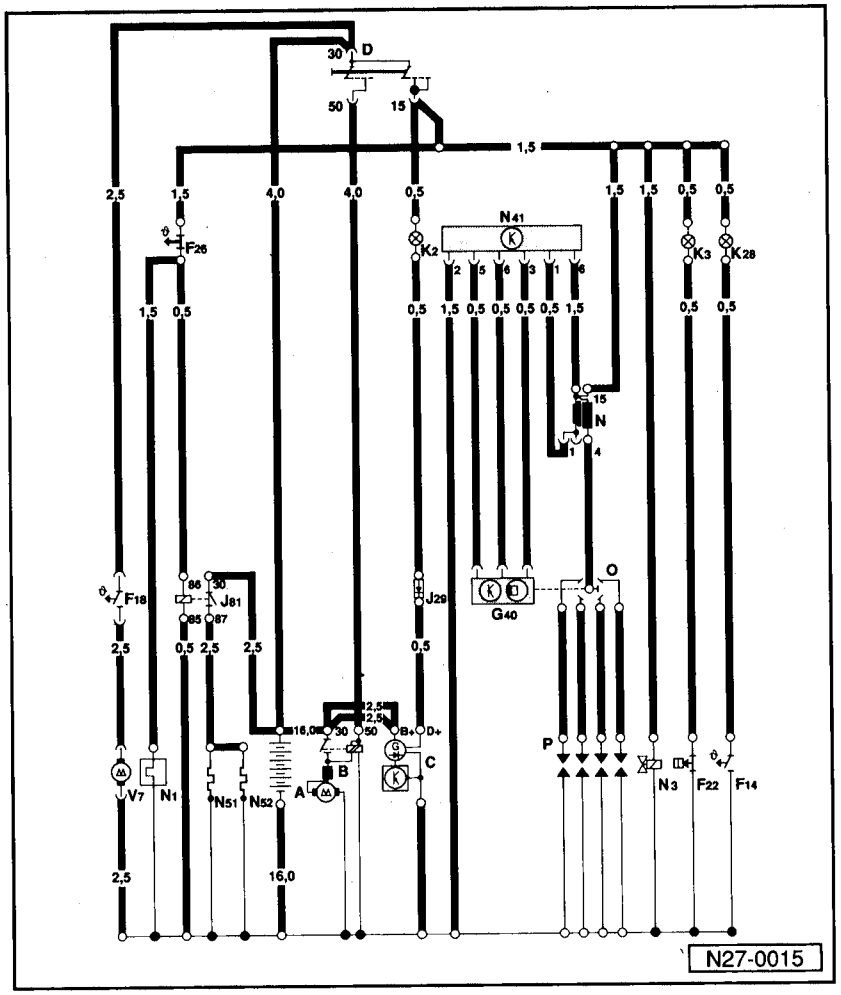

Current flow diagram

Note:

The wiring cross-sections given are minimum sizes. Some units have larger sizes and these should be noted when carrying out repairs.

A - Battery

B - Starter

C - Alternator

D - Ignition/starter switch

F14 - Coolant temperature warning switch (110° C)

F18 - Fan and coolant thermoswitch

F22 - Oil pressure switch (0.3 bar)

F26 - Automatic choke thermoswitch

G40 - Hall sender

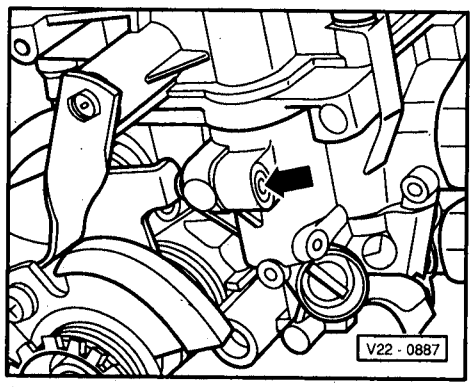

◄ – Remove securing (anti-tamper) plug-arrow-.

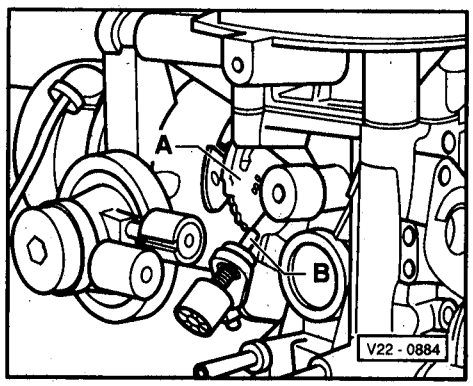

◄ – Operate throttle valve and turn cold start enrichment stepped cam -A- so that cold idling speed adjustment screw -B- is not touching the stepped cam.

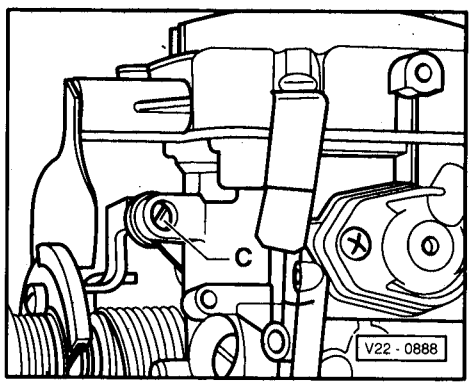

◄ – Open throttle valve by turning limiting screw -C- in until vacuum test unit V.A.G. 1368 displays an increase in vacuum.

– Turn limiting screw out until vacuum has dropped to lowest value.
From this point, screw limiting screw -C- out a ¼ turn.

– Check idling speed adjustment and adjust if necessary ⇒ Page 22-15.

– Secure adjustment screw with new securing (anti-tamper) cap.

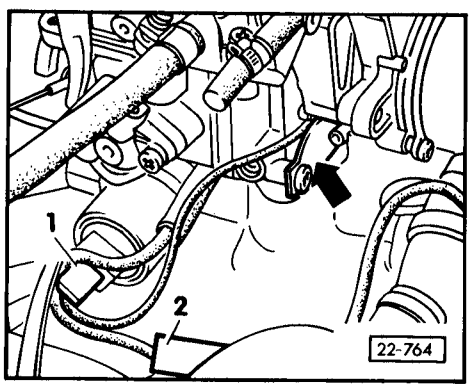

Checking part throttle channel heating

◄ – Pull off connector -1- on bypass air cut-off valve and also pull connection -2- off.

– Connect diode test lamp V.A.G 1527 using cables from V.A.G 1594 to connection -1- and battery positive (+). LED must light up.

– Renew heater element -arrow- if necessary.

Checking and adjusting quantity injected by accelerator pump

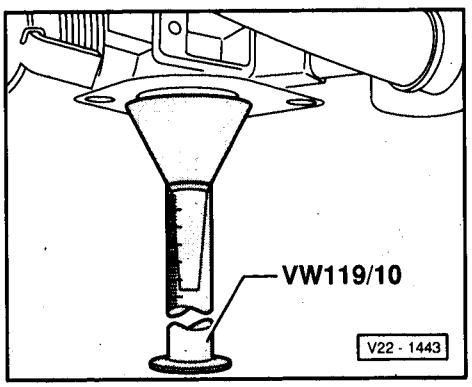

- Carburettor removed

◄ – Hold a funnel and measuring cylinder VW 119/10 under carburettor.

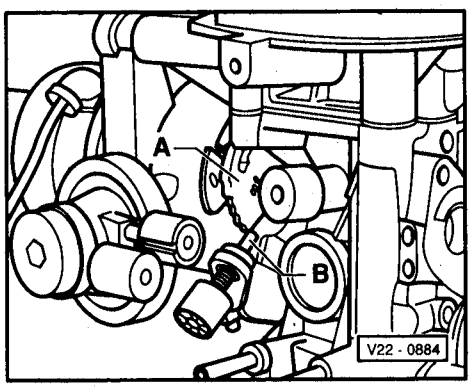

◄ – Operate throttle valve and turn cold start enrichment stepped cam -A- so that cold idling speed adjustment screw -B- is not touching the stepped cam.

– Slowly open throttle valve lever fully 10 times (at least 3 secs/lift).

– Read injected quantity value and devide by 10, compare with specification.
Specification: 0.75...1.05 cm^3/lift.

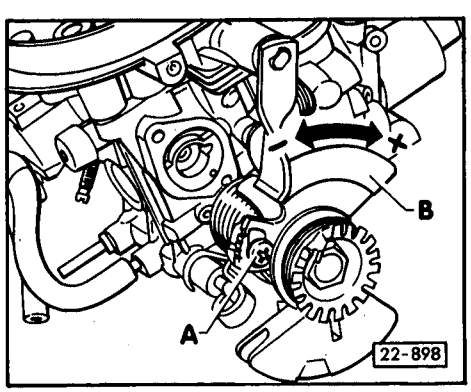

◄ – Adjust quantity injected by loosening locking screw -A- and turning cam -B-.
+ = More fuel injected
– = Less fuel injected

If the require amount of fuel is not achieved:

– Check pump piston seal and non-return valve and injection tube for through flow.

– Secure locking screw after completing adjustments and seal with paint (anti-tamper).

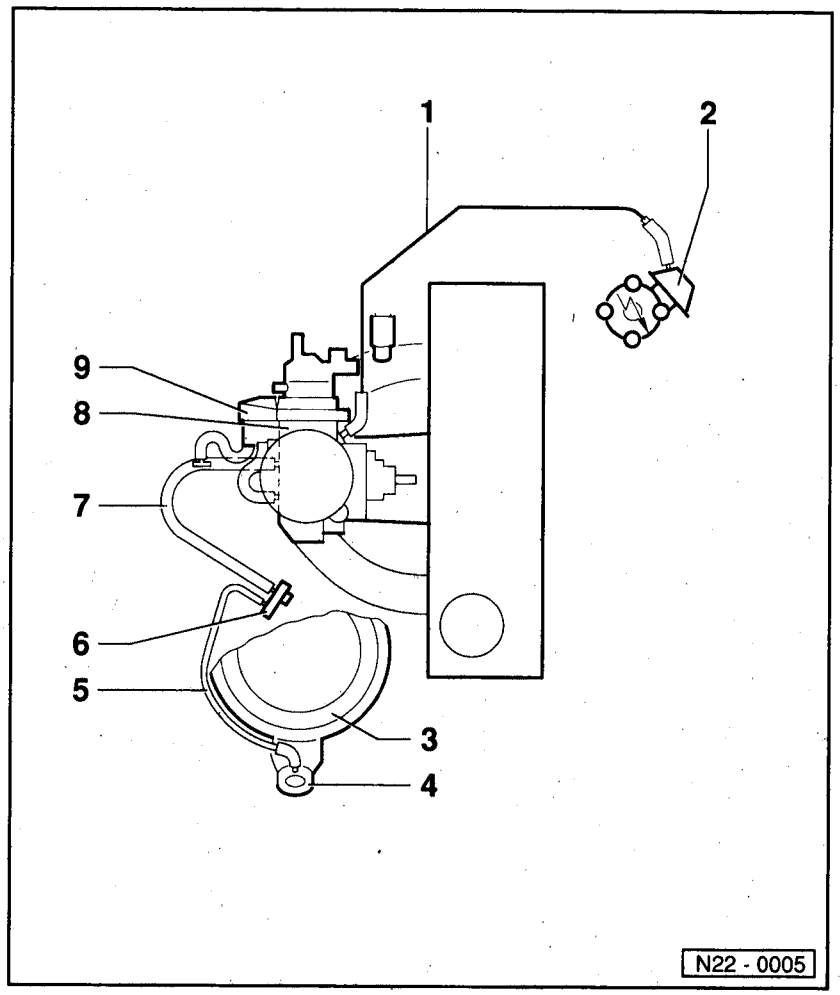

Vacuum connections

1 - **Vacuum pipe**
- Black
- From carburettor to vacuum unit

2 - **Vacuum unit**

3 - **Air cleaner**

4 - **Control box**

5 - **Vacuum pipe**
- Natural
- From temperature regulator to control box

6 - **Temperature regulator**

7 - **Vacuum pipe**
- Natural
- From carburettor to temperature regulator

8 - **Carburettor**

9 - **Pull-down unit**

Electronic speed regulator

Observe rules for cleanliness ⇒ Page 22-38.

Removing and installing electronic speed regulator ⇒ Page 22-27

Current flow diagram ⇒ Page 22-53.

Adjusting Minimum and Maximum regulated speeds without load ⇒ Page 22-30.

Servicing 34 PICT-5 carburettor ⇒ Page 22-32.

Note:

- *All hose connections are secured with screw-type or clamp-type hose clips.*
- *Always renew clamp-type clips with screw-type clips.*
- *Fuel filter is replace at prescribed intervals during a service. Replacing because it is slightly dirty is not required.*

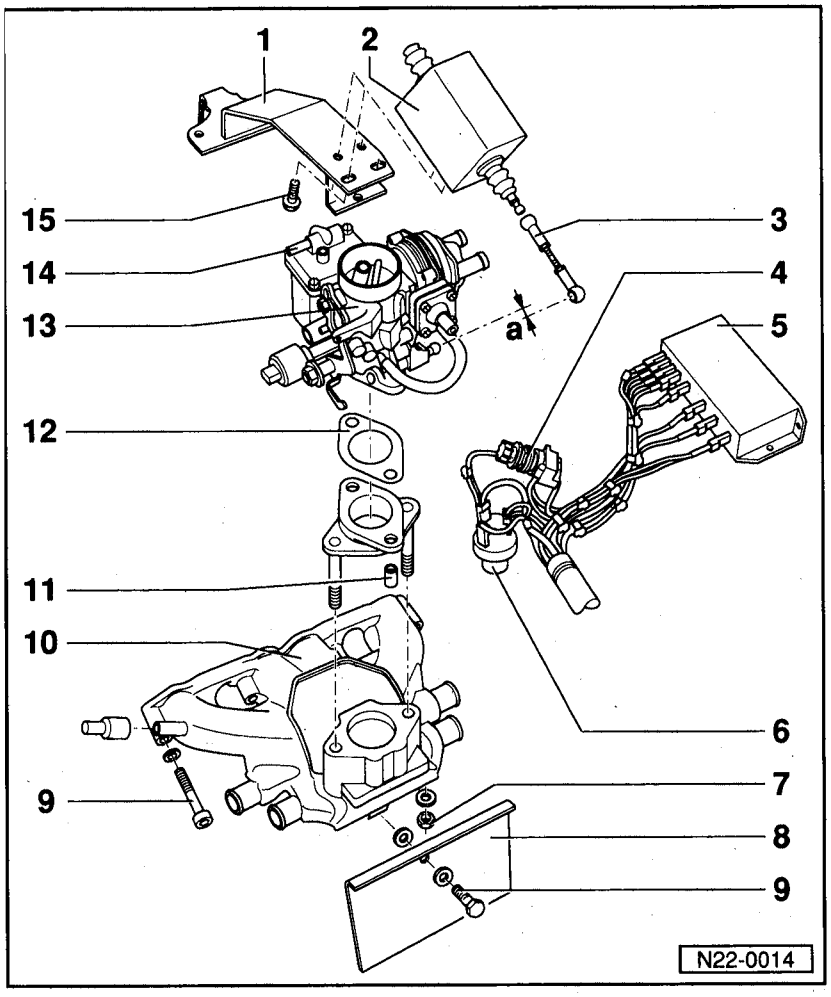

Removing and installing electronic speed regulator

1 - **Carrier plate**
- For lift magnet

2 - **Lift magnet**
- Checking ⇒ Page 22-29

3 - **Rod**
- Checking and adjusting ⇒ Page 22-29

4 - **Outer potentiometer**

5 - **Switch unit**
- Adjusting regulated speed ⇒ Page 22-30

6 - **Ignition/starter switch**

7 - **20 Nm**

8 - **Protective plate**

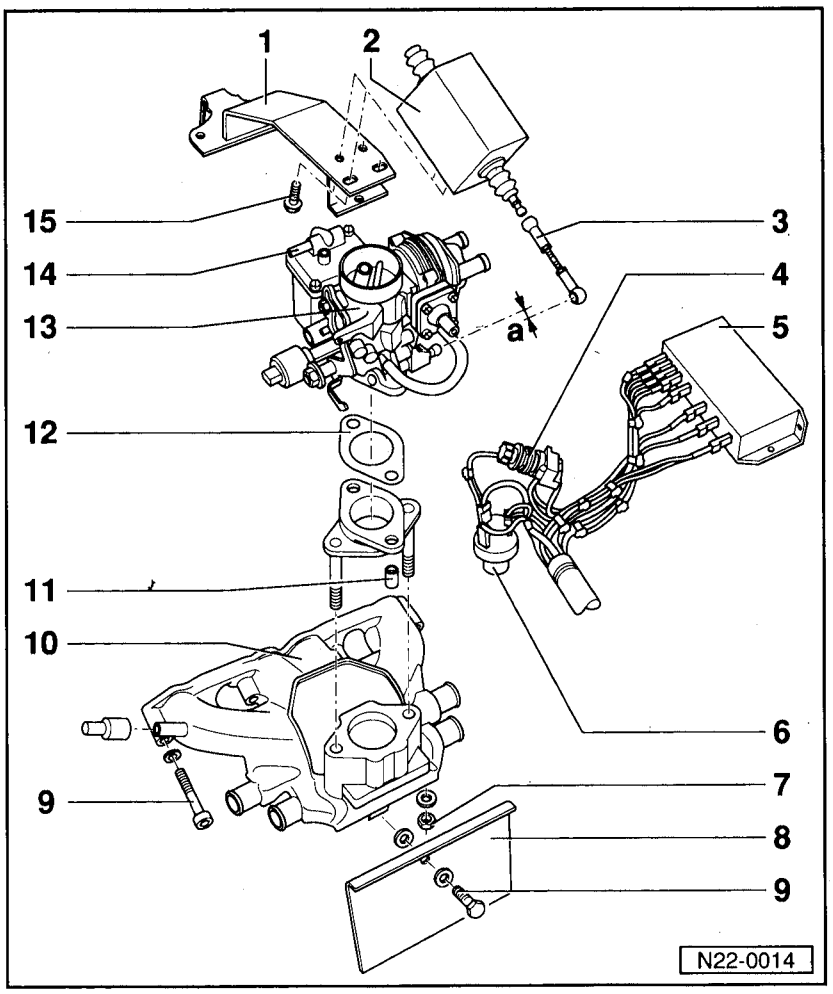

9 - **25 Nm**

10 - **Intake manifold**

11 - **15 Nm**

12 - **Gasket**
- Renew

13 - **Carburettor**
- 34 PICT-5
- Servicing ⇒ Page 22-32

14 - **Fuel supply connection**

15 - **Lift magnet to carrier plate, 20 Nm**

Checking and adjusting lift magnet rod

- Ignition switched off.

- Open air flap (choke valve) by turning stepped cam fully and holding throttle valve closed.

- Take rod off throttle valve control ball head.

- Check ball cup projection beyond ball head a = 1.5 mm, adjust rod if necessary.

- Secure lock nut with paint (tamper-proof) after completing adjustments.

Checking lift magnet

- Battery OK.

- Switch on ignition.

- Loosen electronic switch unit terminal 2 connection.

- Connect multi meter V.A.G 1526 or 1715 to measure voltage using aux. cables from 1594 to lift magnet wiring.

- Turn outer potentiometer passed switched-on point to right.

When doing this the lift magnet must open the throttle valve up to full throttle stop and a voltage of
Specification: 11 V
must be displayed.

If specification is not achieved:

- Check wiring according to current flow diagram.

If specification is achieved, but throttle valve is not opened by lift magnet.

- Renew lift magnet.

Adjusting MIN. and MAX. regulated speeds, without load

(Engine ➢ 11.87)

Note:

The adjusting screws are set in the factory and should not be disturbed. If the screws require adjustment then adjust as follows.

- For the adjustments, use a screwdriver with a blade width of 2.5 mm, which during adjustments must not be pushed down.
- Observe manufactures instructions and adjustment figures.

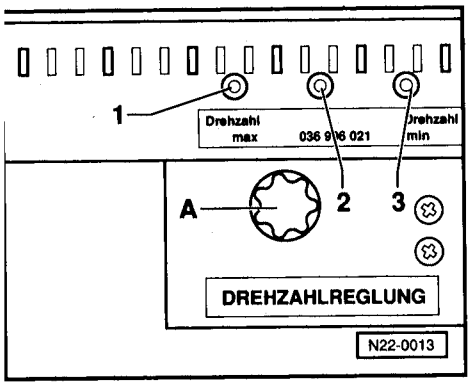

- Turn adjusting screw -3- onto right stop and adjusting screw -1- onto left stop.
- Turn adjusting screw -2- to centre position.
- Turn outer potentiometer -A- passed switched-on point to right and then turn to left onto -Min.- regulated speed stop.
- Start engine.
- Turn adjusting screw -3- to left until prescribed Min. regulated speed is achieved.
- Turn outer potentiometer knob -A- to right onto -Max.- regulated speed stop.
- Turn adjusting screw -1- to right until prescribed Max.. regulated speed is achieved.
- Turn knob -A- to alternative positions. The engine must at each speed set from Min. to Max. regulated speed settings run evenly if necessary, turn adjusting screw -2- to left until engine running is satisfactory.
- After completing adjustments seal adjusting screws with sealing a sticker.

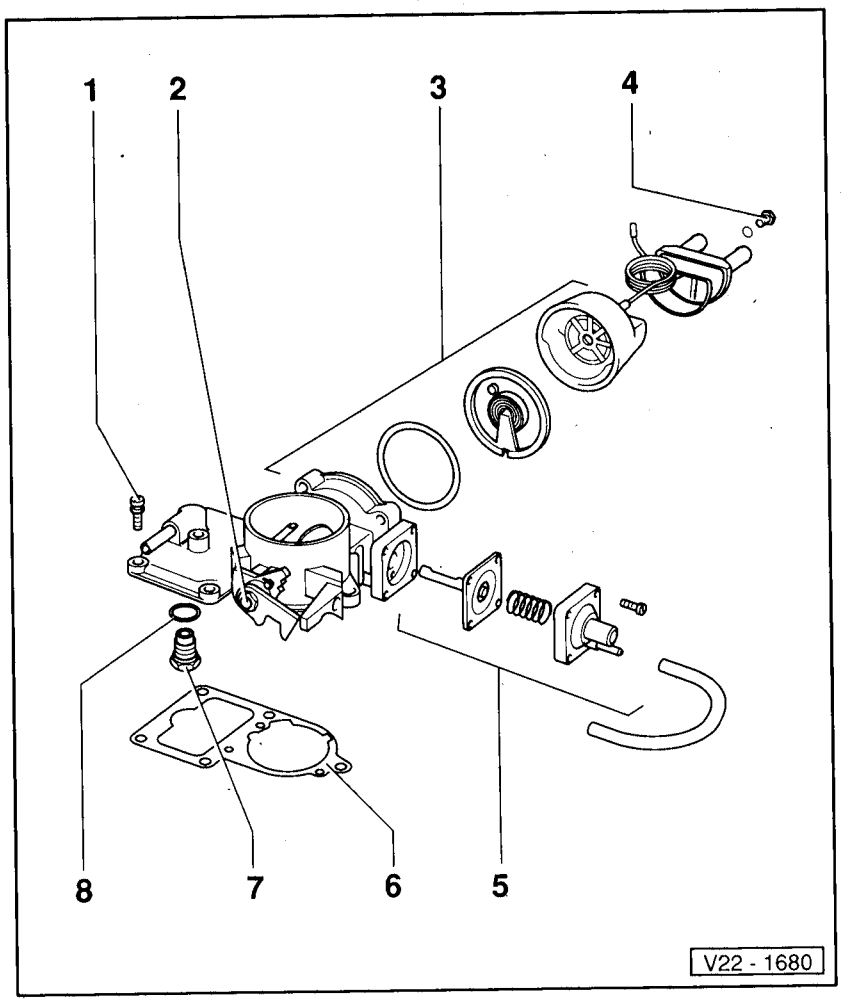

Servicing 34 PICT-5 carburettor

Note:
Adjusting screws are secured with caps, plugs or paint so that adjustment is not possible without destroying the securing (anti-tamper) device. After completing repairs/adjustments reinstate securing (anti-tamper) device.

- *Lubricate all carburettor joints with MoS_2 grease.*
- *All hose connections are secured with screw-type or clamp-type hose clips.*
- *Always renew clamp-type clips with screw-type clips.*

Carburettor adjustment data and fittings ⇒ Page 22-37.

Vacuum connection diagram ⇒ Page 22-46.

Adjusting electronic speed regulator ⇒ Page 22-48.

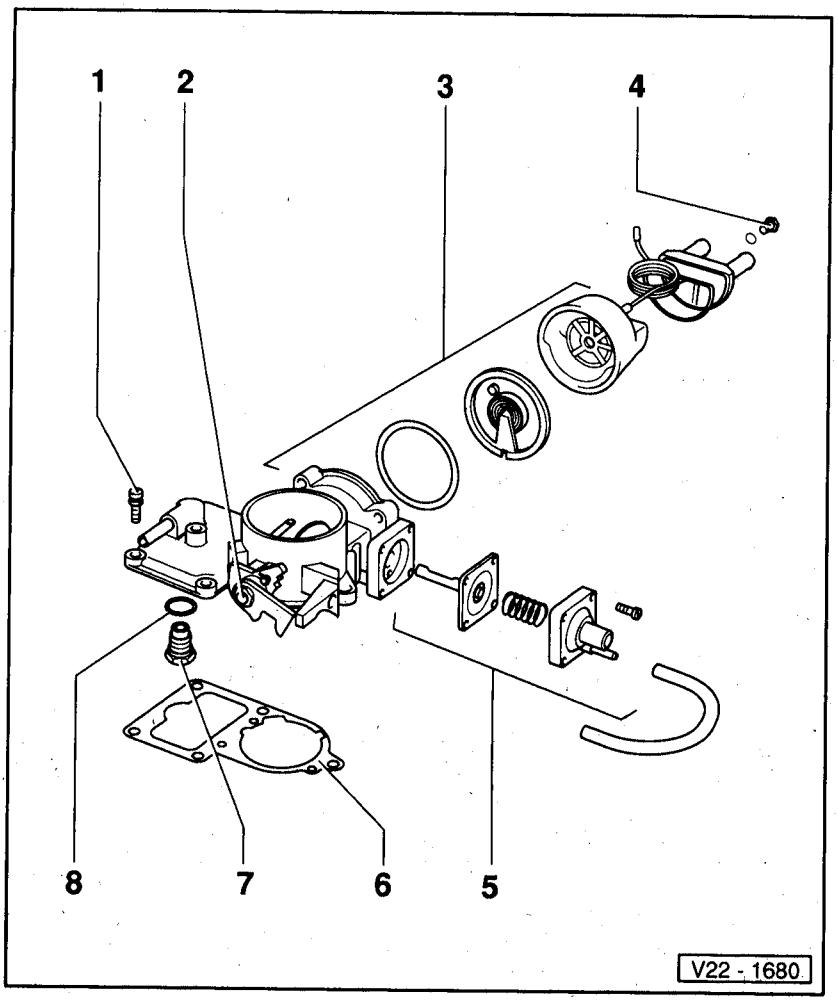

Carburettor upper part

1 - **5 Nm**

2 - **Air flap (choke valve) shaft**
- Check for ease of movement

3 - **Automatic choke**
- Electrically and water heated
- Adjusting: ⇒ Page 22-39, Fig. 1

4 - **10 Nm**

5 - **Pull-down unit**
- Checking ⇒ Page 22-42
- Checking and adjusting air flap (choke valve) ⇒ Page 22-42

6 - **Gasket**
- Renew
- Use gasket with same profile

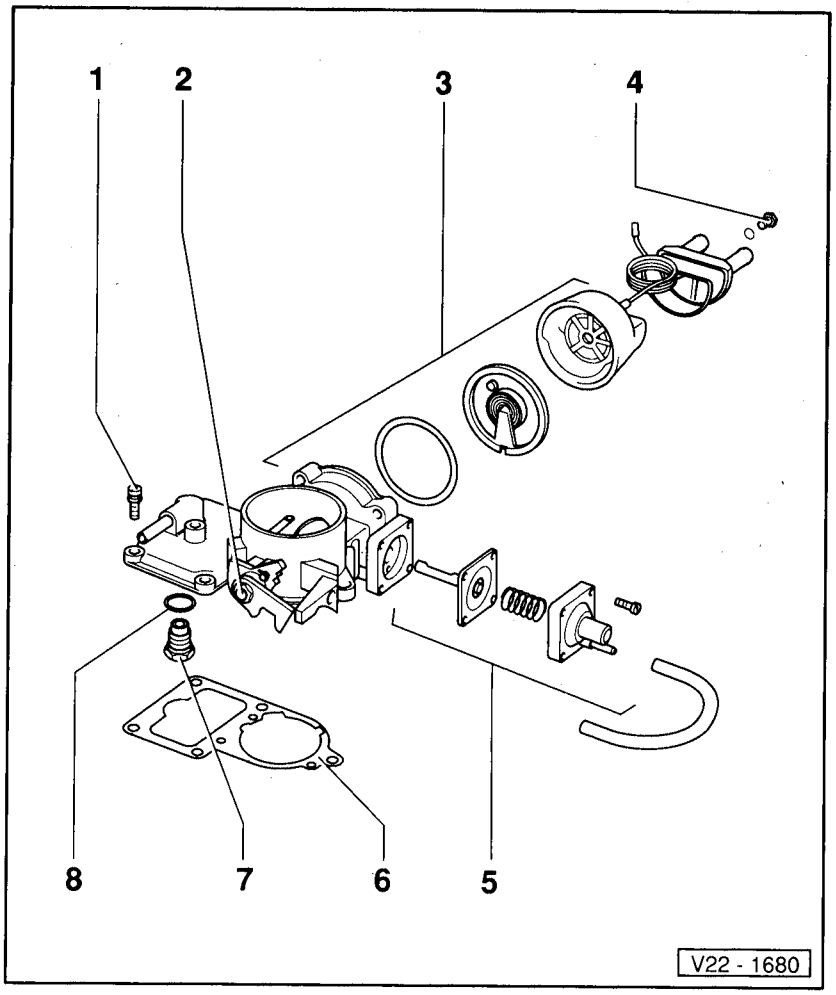

7 - **Float needle valve**

8 - **Seal**
- Check thickness
  Specification ⇒ Page 22-37 carburettor data and fittings.

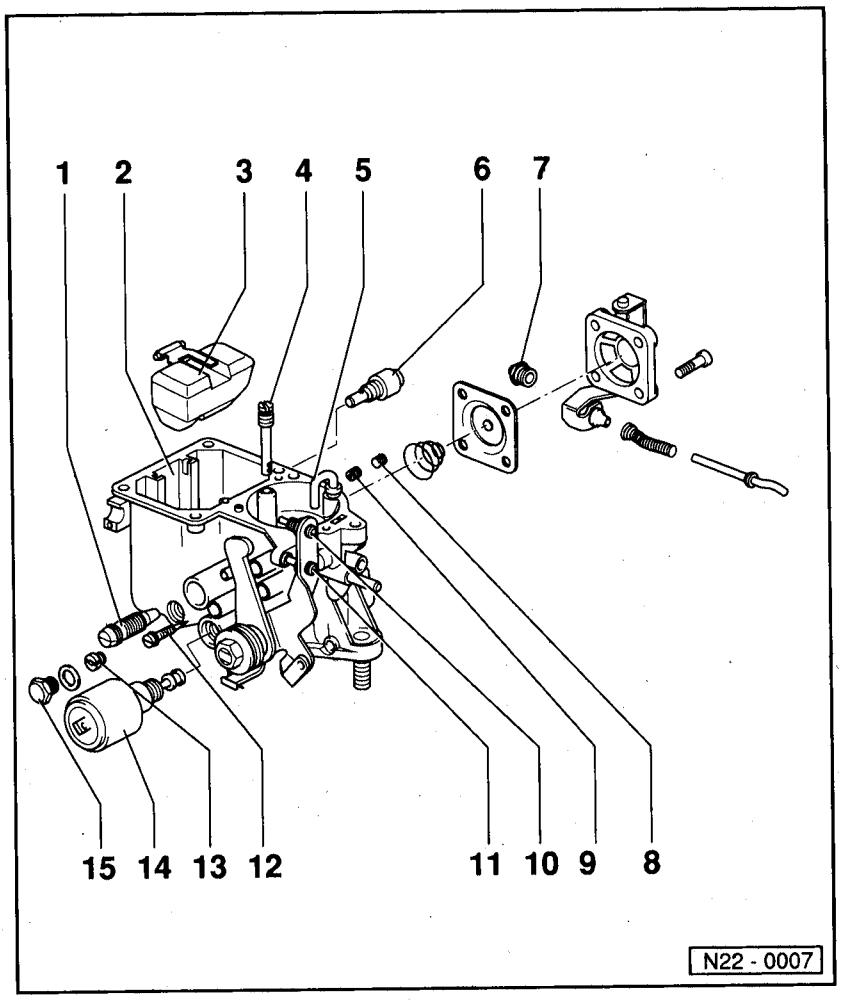

Carburettor lower part

1 - **Idling speed adjustment screw**
- Checking and adjusting: Adjusting idling speed ⇒ Page 22-39

2 - **Float chamber**

3 - **Float**
- Not adjustable

4 - **Air correction jet with emulsion tube**

5 - **Injection tube**

6 - **Idling speed jet**

7 - **Adjusting nut**
- For accelerator pump
- Adjusting ⇒ Page 22-39

8 - **Plug**
- For additional fuel jet

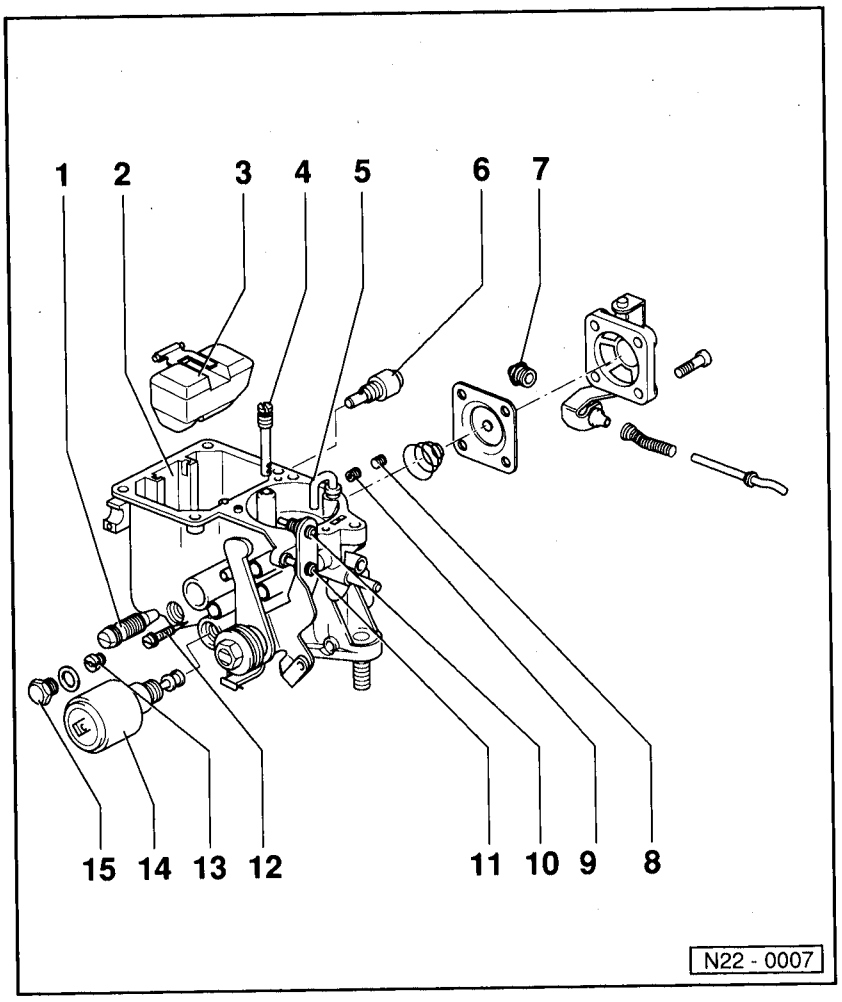

9 - **Additional fuel jet**

10 - **Adjusting screw**
- Checking and adjusting cold idling speed ⇒ Page 22-41

11 - **Limiting screw**
- Throttle valve basic setting ⇒ Page 22-43

12 - **CO adjustment screw**
- Checking CO content and adjusting idling speed ⇒ Page 22-39

13 - **Main jet**

14 - **Bypass air cut-off valve**
- Must click when switching ignition on
- When removing valve, press pin in first approx. 3...4 mm

15 - **Plug**

Carburettor data and fittings

Engine	Period of use		01.84 ➢
	Engine code		026.2/ADF
Carburettor	Type		34 PICT-5
	Part number		049 129 017 S
Carburettor fittings	Venturi	Ø mm	27
	Main jet		X 140
	Air correction jet with emulsion tube		115 z
	Idling speed fuel jet		52.5
	Idling speed air jet		140
	Auxiliary fuel jet		40
	Auxiliary air jet		100
	Float needle valve	Ø mm	1.5
	Washer under float needle valve	mm	0.5
	Cold idling speed	rpm	2350...2450
	Air flap (choke valve) gap	mm	4.4
	Choke cover markings		139
Idling settings [1]	Speed	rpm	900...1000
	CO content	Vol. %	0.5...1.5

[1] Observe check and setting conditions ⇒ Page 22-39

Rules for cleanliness

When working on the fuel supply system, the following "5 rules" for cleanliness are to be carefully observed :

- Thoroughly clean all connections and their adjacent areas before detaching.
- Place parts which have been removed on a clean surface and cover them with plastic sheet or paper. Do not use fluffy cloths!
- Components which have been opened should be carefully covered or sealed if repair cannot be carried out immediately.
- Install clean components only:
  Only unpack replacement parts immediately before installation.
  Do not use parts which have been kept unpacked (e.g. in tool boxes, etc.).
- When the system is open:
  Do not use compressed air, if it can be avoided.

Do not move the unit unless absolutely necessary.

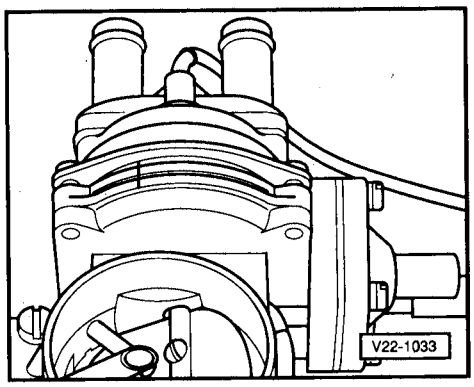

◄ **Fig. 1 Adjusting automatic choke**

Mark on automatic choke must align with mark on carburettor upper part.

Adjusting accelerator pump

- Adjust accelerator pump at adjusting nut and by adding or removing shims until after moving throttle valve lever 8 mm (free travel), fuel emits from injection tube.

Idling speed adjustment

- Engine temperature at least 60 °C.
- Ignition timing OK, checking ⇒ Page 28-13.
- Electrical consumers switched off.
- Air flap (choke valve) fully open.
- Hose for crankcase breather pulled off at cylinder head cover and air cleaner side sealed.

Checking and adjusting idling speed and CO content

- Ignition switched off.

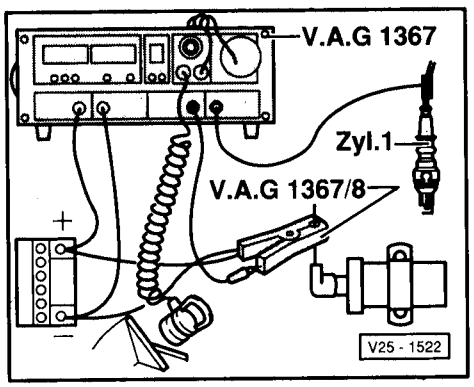

◄ – Connect ignition tester V.A.G 1367 with pick-up clamp V.A.G 1367/8 or ignition tester V.A.G 1767.

– Connect CO tester V.A.G. 1363A to exhaust end pipe.

– Start engine and run at idling speed.

– Checking idling speed and CO content and if necessary correcting by alternately turning adjustment screws
  Idling speed: 900...1000 rpm.
  CO content: 0.5...1.5 %

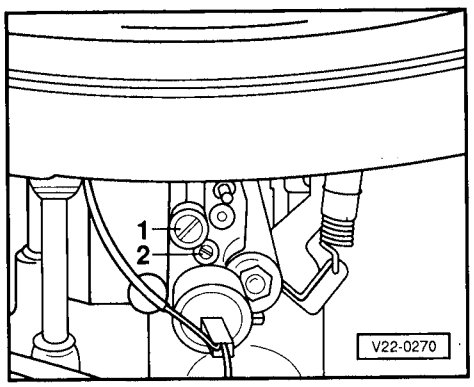

◄ 1 - idling speed adjustment screw
2 - CO content adjustment screw

– Secure CO content adjustment screw with new anti-tamper cap.

Note:

After adjusting CO content reconnect crankcase breather hose. If the CO content increases now this is not due to incorrect adjustment, but caused by oil thinning enrichment from the crankcase, as a result of short operating periods.

Checking and adjusting cold idling speed

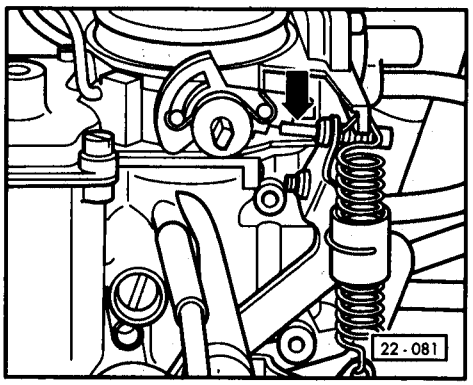

- Engine temperature at least 60 °C.
- Idling speed adjustment OK, checking ⇒ Page 22-39.
- Ignition timing OK, checking ⇒ Page 28-13.

– Connect ignition tester V.A.G 1367 with pick-up clamp V.A.G 1367/8 or ignition tester V.A.G 1767.

◄ – Set adjusting screw -arrow- on 3rd step of stepped cam.

– Check cold idling speed and if necessary adjust at adjusting screw
  Specification: 3400...3800 rpm.

– Secure screw after adjusting with a securing (anti-tamper) cap.

Checking pull-down unit operation

– Remove air cleaner cover.

– Run engine at idling speed.

– Set adjustment screw on highest step on stepped cam.

– Close air flap (choke valve) by hand. If air flap closes easily down to a gap of approx. 4 mm and then a greater resistance is felt, the pull-down unit is OK. If air flap can be closed without any resistance being felt, either the pull-down unit or vacuum system is leaking.

Checking pull-down unit and adjusting

(Air flap (choke valve) gap and leaks)

– Remove choke cover.

– Set adjustment screw on highest step on stepped cam.

– Close air flap (choke valve).

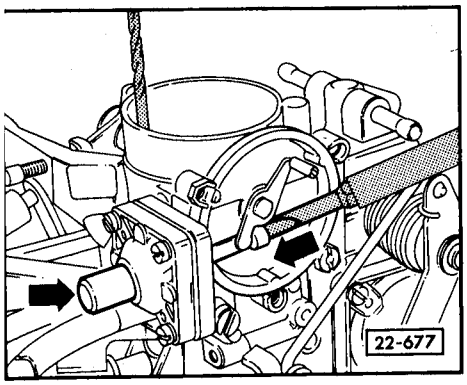

- Press pull rod of vacuum membrane back onto stop. In this position check gap between carburettor housing and upper edge of air flap (choke valve) with a twist drill.

- Adjust air flap (choke valve) gap at adjusting screw if necessary -arrow-.
  Specification: 4.4 mm.

Throttle valve basic setting

Basic setting with vacuum test unit V.A.G 1368 ⇒ Page 22-44.

Note:

The limiting screw is set in the factory and should not be disturbed. If the screw requires adjustment then adjust as follows.

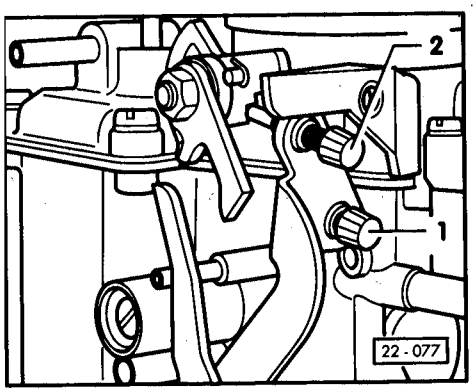

- With engine stopped, open air flap (choke valve) fully using stepped cam and hold throttle valve in closed position.

- Remove securing (anti-tamper) cap -1- from limiting screw.

- Unscrew limiting screw -1- until a gap exists between stop and limiting screw.

- Screw in limiting screw -1- carefully until screw just touches stop.

Note:

To determine exact point at which screw makes contact, place a thin piece of paper between screw and stop. By moving paper and turning screw at same time, the point of contact can be found.

- From this point turn ½ turn further.
- Adjust idling speed and CO content: ⇒ Page 22-39, adjusting idling speed.
- Secure screw after adjusting with a securing (anti-tamper) cap.

Throttle valve basic setting with vacuum test unit V.A.G 1368

- Engine temperature at least 60°C.

- Run engine at idling speed.

- Pull off hose for vacuum adjustment on carburettor and connect vacuum test unit V.A.G. 1368.

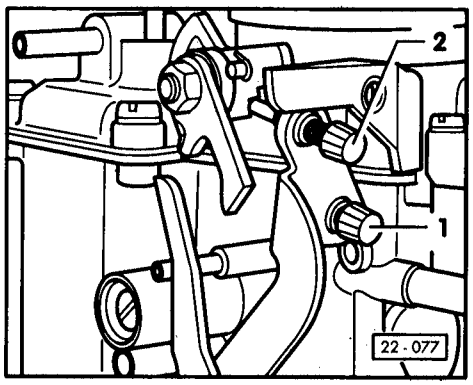

◄ – Unscrew limiting screw -1- until vacuum has fallen to -0- (zero).

– Turn limiting screw out a further ¼ turn.

– Check idling speed and CO content adjustment
⇒ Page 22-39.

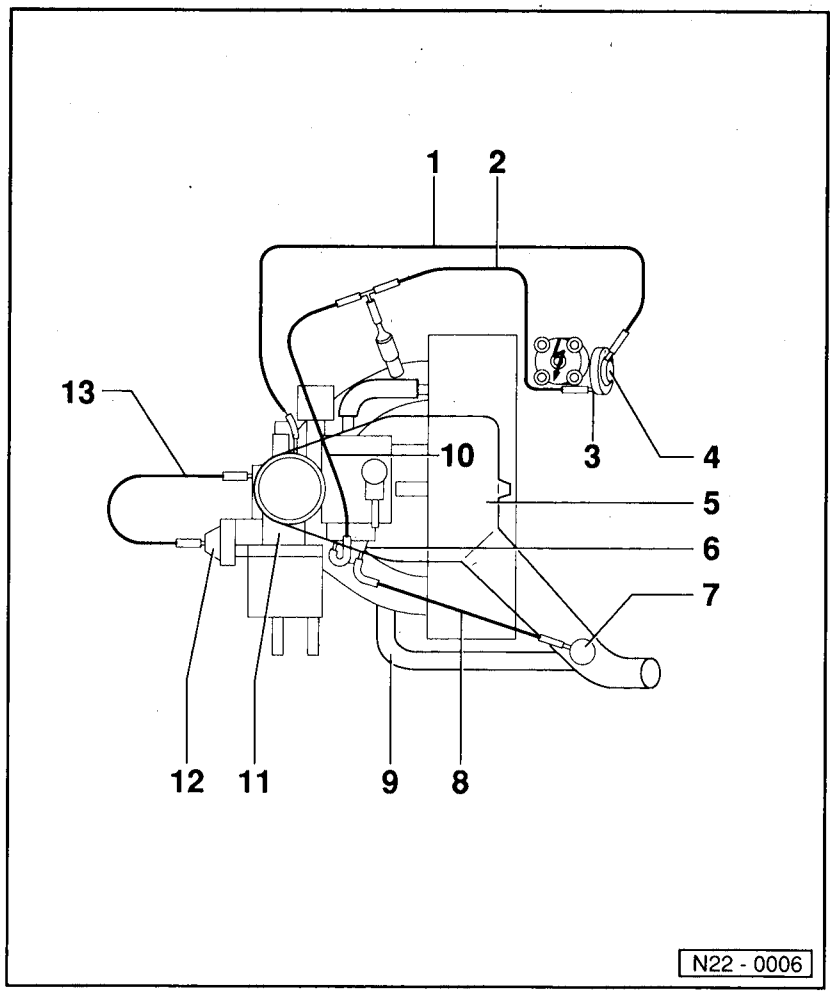

Vacuum connections

1 - **Vacuum pipe**
- Black
- From carburettor to distributor vacuum unit.

2 - **Vacuum pipe**
- White
- From distributor vacuum unit -retarded to vacuum take-off point on intake manifold.

3 - **Vacuum unit -retarded-**

4 - **Vacuum unit -advanced-**

5 - **Air cleaner**

6 - **Temperature regulator**

7 - **Control box**

8 - **Vacuum pipe**
- Natural
- From temperature regulator to control box.

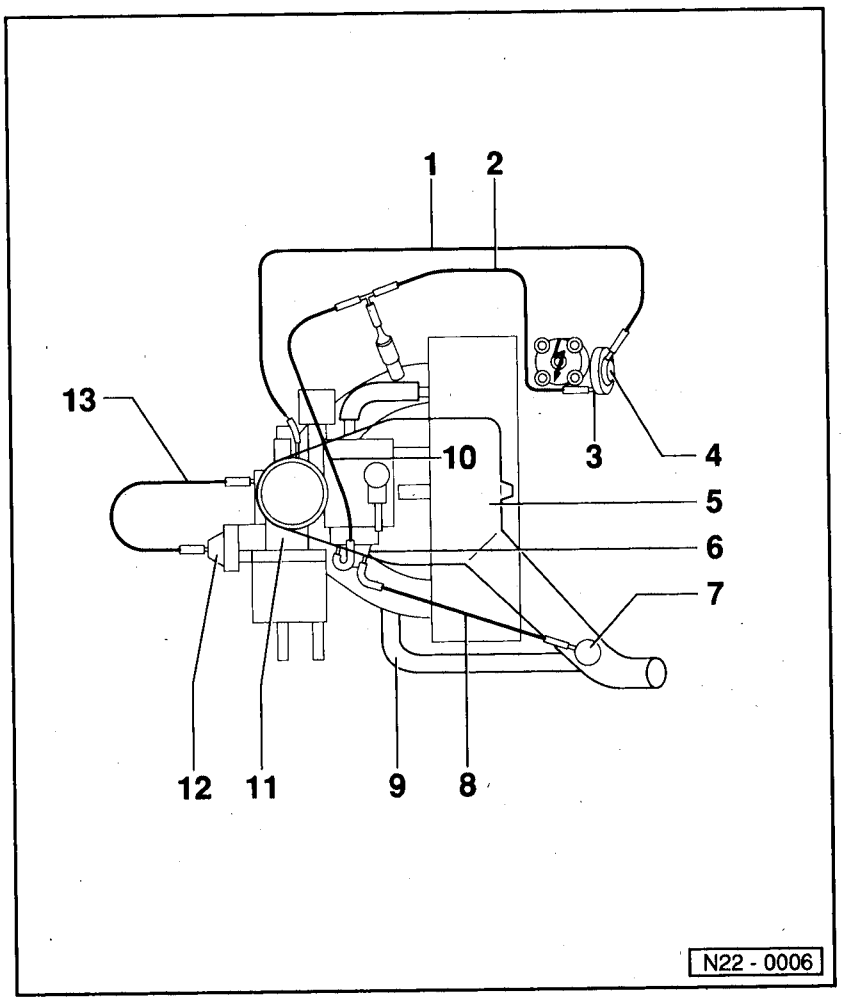

9 - **Pre-heating hose**

10 - **Vacuum pipe**
- Natural
- From temperature regulator to vacuum take-off point on intake manifold.

11 - **Carburettor**

12 - **Pull-down unit**

13 - **Vacuum pipe**
- Black
- From carburettor to pull-down unit

Adjusting Electronic speed regulator

Engine code 026.2
10.87 to 09.89

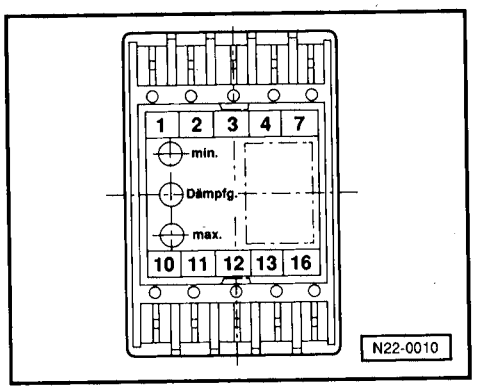

Engine codes 026.2 from 10.89 ➢, ADF ⇒ Page 22-49.

◀ – With engine stopped, turn trim potentiometers -min.- and -max.- approx. 5 full turns to left (beyond stop slip-clutch) to ensure at zero position.

– Turn trim potentiometer (Dämphung (damping)) approx. 5 full turns to right (beyond stop slip-clutch) and then turn 2 turns to left again to bring to centre position.

– Switch large outer potentiometer (10...50 kΩ) to right and turn left onto stop position $n_{N\ min}$.

– Start engine and turn trim potentiometer -min-, under nominal load, to right until $n_{N\ min}$ is reached.

– Turn large outer potentiometer for speed regulation (10...50 kΩ) to right onto stop position $n_{N\ max}$.

- Turn trim potentiometer -max-, under nominal load, to right until the preferred $n_{N\ max}$ is reached.

Note:

With the outer potentiometer for speed regulation (10...50 kΩ) any desired engine speed, between $n_{N\ min}$ *and* $n_{N\ max}$ can be set.

If when adjusting, uneven idling occurs, then turn trim potentiometer(Dämphung (damping))to left slightly until idling speed is satisfactory again. Then check set engine speed again and if necessary correct trim potentiometers.

Engine codes 026.2 from 10.89 ➢, ADF

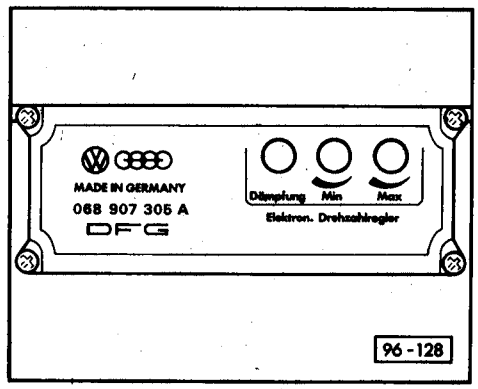

- With engine stopped, turn trim potentiometers -min.- and -max.- approx. 20 turns to left (beyond stop slip clutch) to ensure at zero position.

- Turn trim potentiometer (Dämphung (damping)) approx. 20 turns to right (beyond stop slip-clutch) and then turn 10 turns to left again to bring to centre position.

- Switch outer potentiometer for speed regulation (10 kΩ) to right and turn left onto stop position $n_{N\ min}$.

- Start engine and turn trim potentiometer -min-, under nominal load, to right until $n_{N\ min}$ is reached.

- Turn outer potentiometer for speed regulation (10 kΩ) to right onto stop position $n_{N\ max}$.

- Turn trim potentiometer -max-, under nominal load, to right until the preferred $n_{N\ max}$ is reached.

Note:

With the outer potentiometer for speed regulation (10 kΩ lin) any desired engine speed, between $n_{N\ min}$ *and* $n_{N\ max}$ can be set.

If when adjusting, uneven idling occurs, then turn trim potentiometer (Dämphung (damping)) to left slightly until idling speed is satisfactory again. Then check set engine speed again and if necessary correct trim potentiometers.

Removing, installing and adjusting impulse sender

Electrical impulses equalling the number of teeth on starter ring are produced, these are sent to the speed regulator as a signal for -actual- engine speed by the impulse sender.

The assembly must be fitted to the flywheel side in a hole (17 mm ∅ ± 0.1 mm) in the connecting housing (e.g. gearbox bell housing) or with relevant securing brackets.

Depending on unit wiring loom it is recommended to use the following connections:

- Connect cable connection using three pin connector (171 906 230) with individual flat contacts (N 903 352.03).

- Slide commercially available fully insulated individual flat spade connections onto spade terminals.

Note:

When not using original connectors, note subsequent connection cable colours.

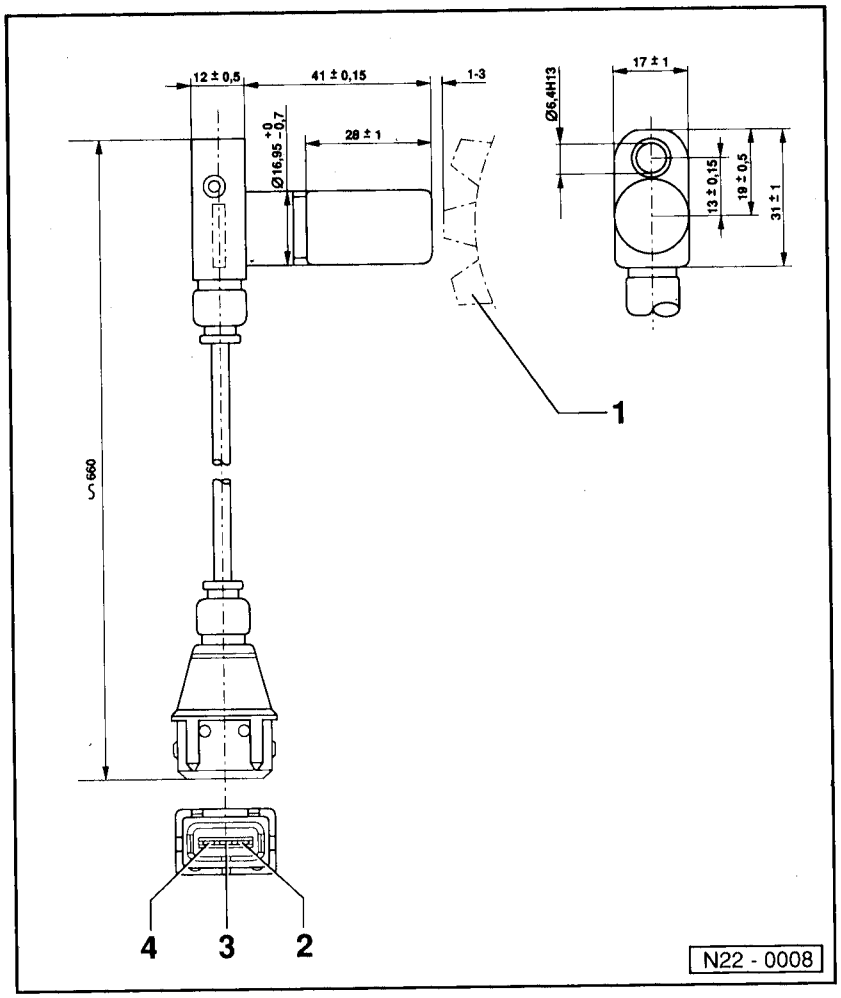

Impulse sender assembly plan

1 - Flywheel toothed ring

2 - + (red)

3 - – (white)

4 - Screening

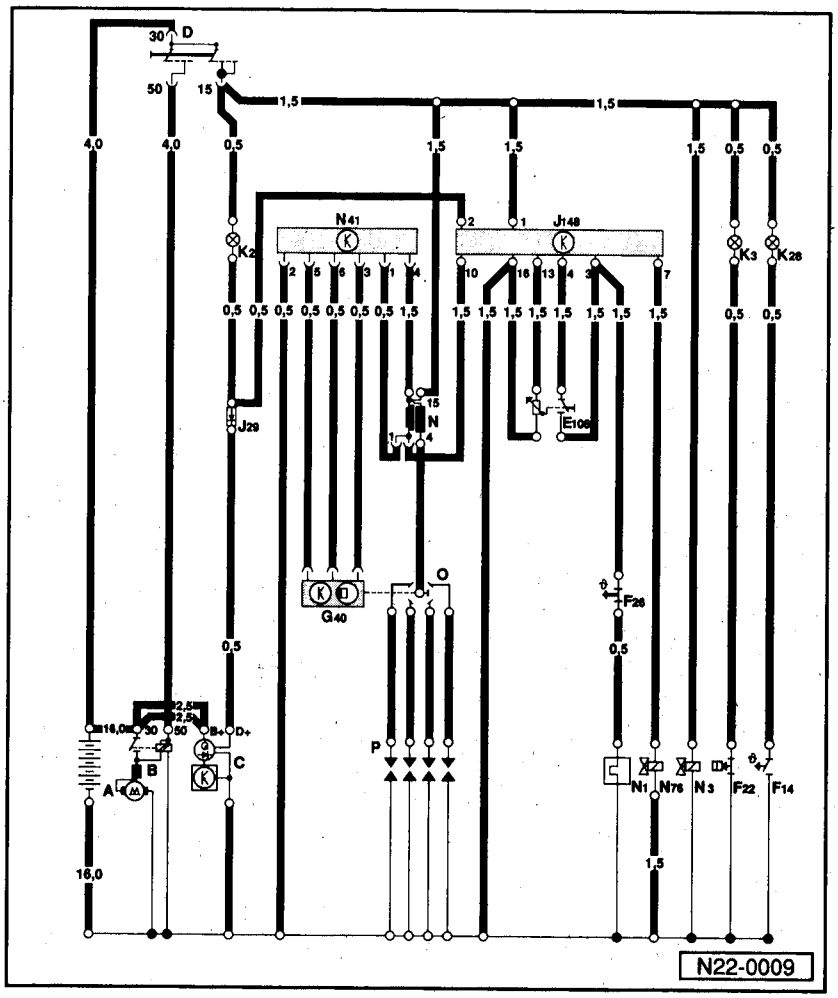

Current flow diagram

Engine code 026.2,
➢10.87

Note:

Cross section details are minimum sizes. Larger cross sections are unit dependant and must be observed in cases of repair.

A	–	**Battery**
B	–	**Starter**
C	–	**Alternator**
D	–	**Ignition/starter switch**
E108	–	**Outer potentiometer**
F14	–	**Coolant temperature regulator switch (110°C)**
F22	–	**Oil pressure switch (0.3 bar)**
F26	–	**Automatic choke thermo switch**
G40	–	**Hall sender**

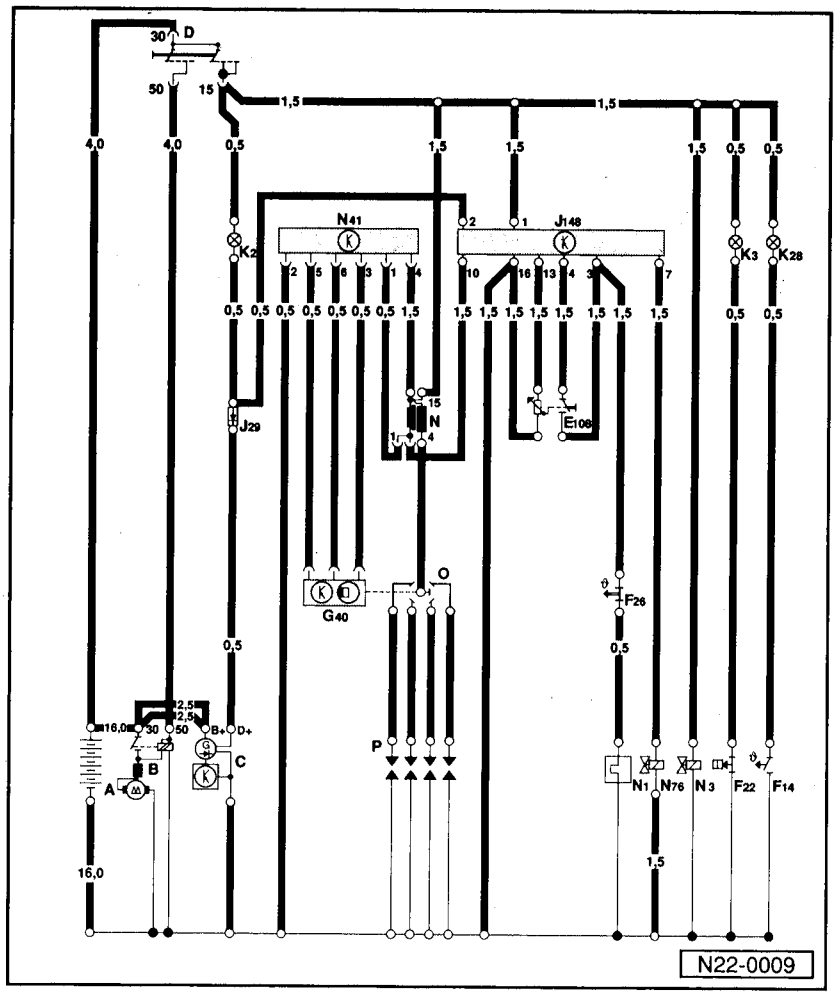

J29	–	**Blocking diode**
J148	–	**Engine speed regulator control unit**
K2	–	**Alternator warning lamp**
K3	–	**Oil pressure warning lamp**
K28	–	**Coolant temperature warning lamp**
N	–	**Ignition coil**
N1	–	**Carburettor automatic choke**
N3	–	**Bypass air cut-off valve**
N41	–	**TCI-H switch unit**
N76	–	**Lift magnet**
O	–	**Distributor**
P	–	**Spark plug connector**

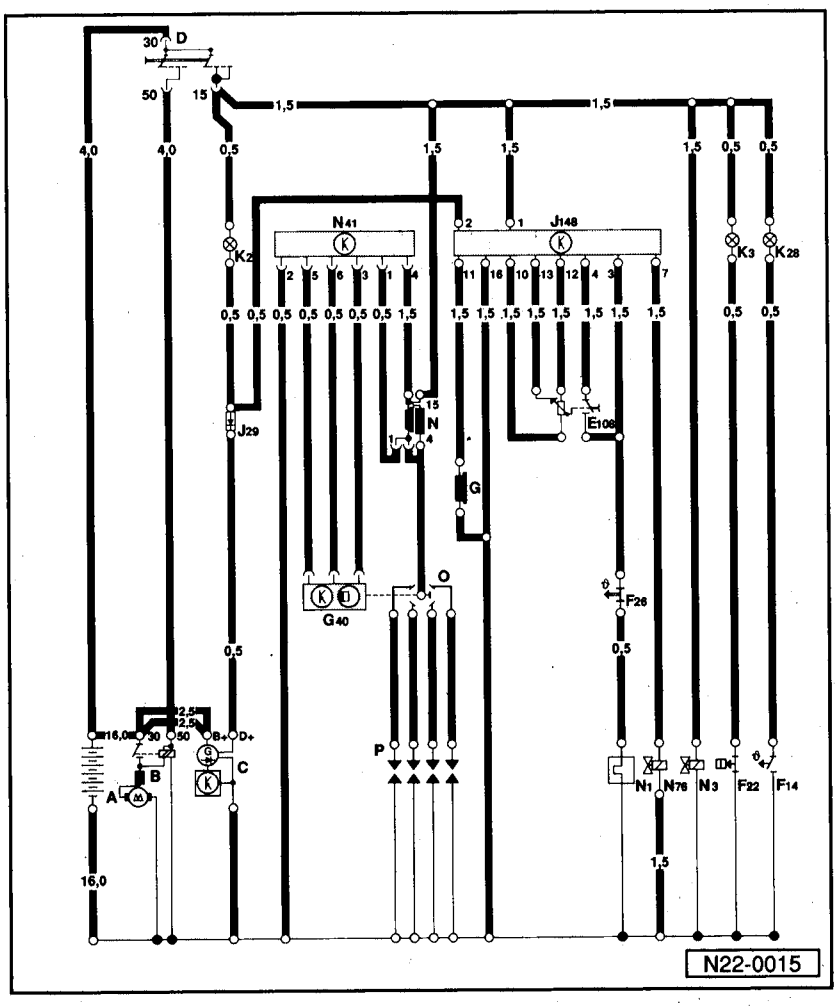

Current flow diagram

Engine code 026.2
1187 to 09.89

Note:

Cross section details are minimum sizes. Larger cross sections are unit dependant and must be observed in cases of repair.

A	–	Battery
B	–	Starter
C	–	Alternator
D	–	Ignition/starter switch
E108	–	Outer potentiometer
F14	–	Coolant temperature regulator switch (110°C)
F22	–	Oil pressure switch (0.3 bar)
F26	–	Automatic choke thermo switch
G40	–	Hall sender
G	–	Engine speed sender

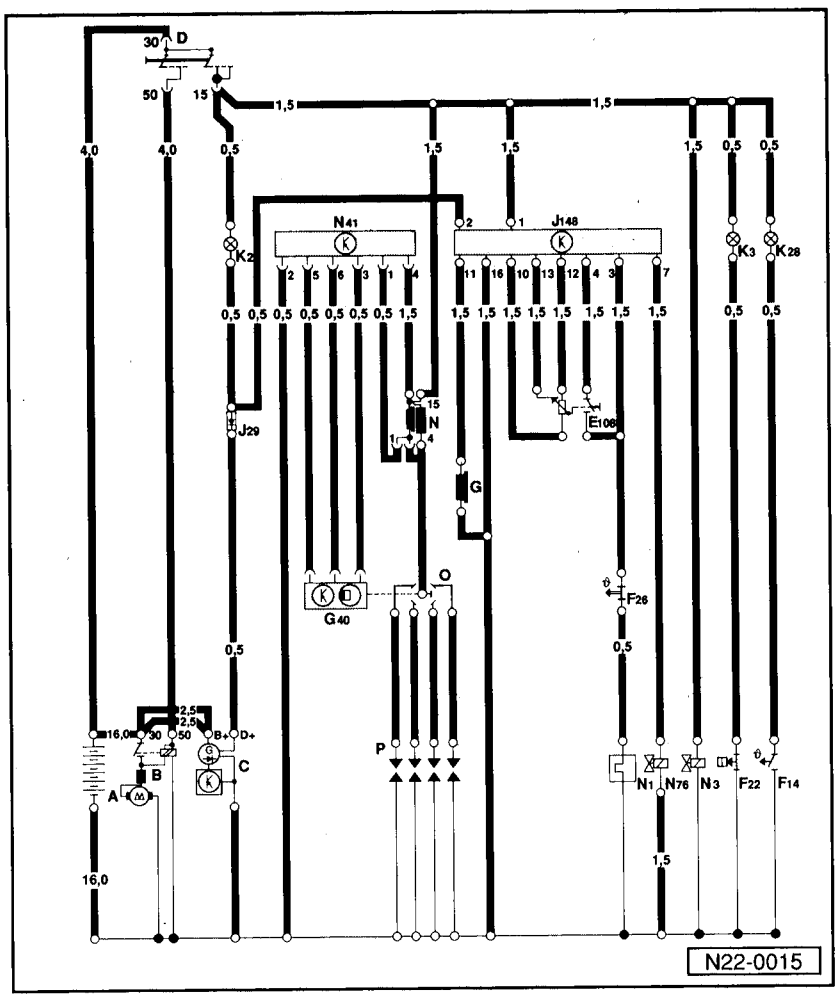

J29	–	Blocking diode
J148	–	Engine speed regulator control unit
K2	–	Alternator warning lamp
K3	–	Oil pressure warning lamp
K28	–	Coolant temperature warning lamp
N	–	Ignition coil
N1	–	Carburettor automatic choke
N3	–	Bypass air cut-off valve
N41	–	TCI-H switch unit
N76	–	Lift magnet
O	–	Distributor
P	–	Spark plug connector

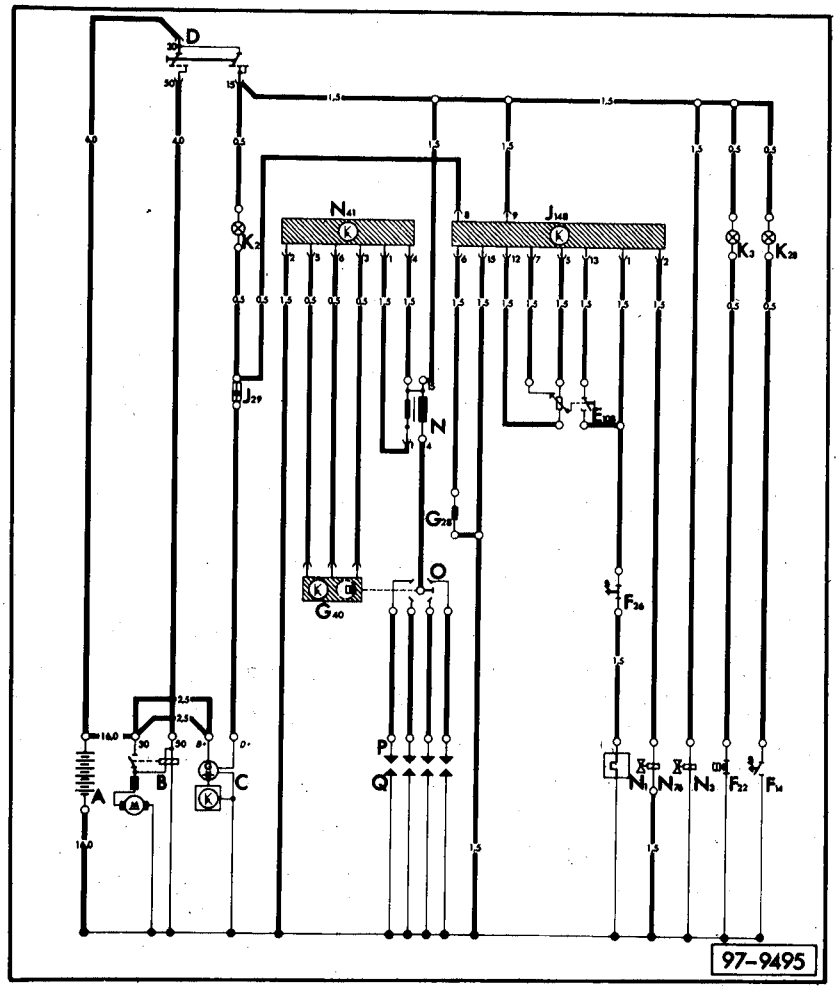

Current flow diagram

Engine code 026.2
10.89 ➢, ADF

Control unit (J148) connector contact assignment ⇒ Page 22-59.

Note:

Cross section details are minimum sizes. Larger cross sections are unit dependant and must be observed in cases of repair.

A	–	**Battery**
B	–	**Starter**
C	–	**Alternator**
D	–	**Ignition/starter switch**
E108	–	**Speed regulator outer potentiometer (10 kΩlin)**
F14	–	**Coolant temperature regulator switch (110°C)**
F22	–	**Oil pressure switch (0.3 bar)**
F26	–	**Automatic choke thermo switch**

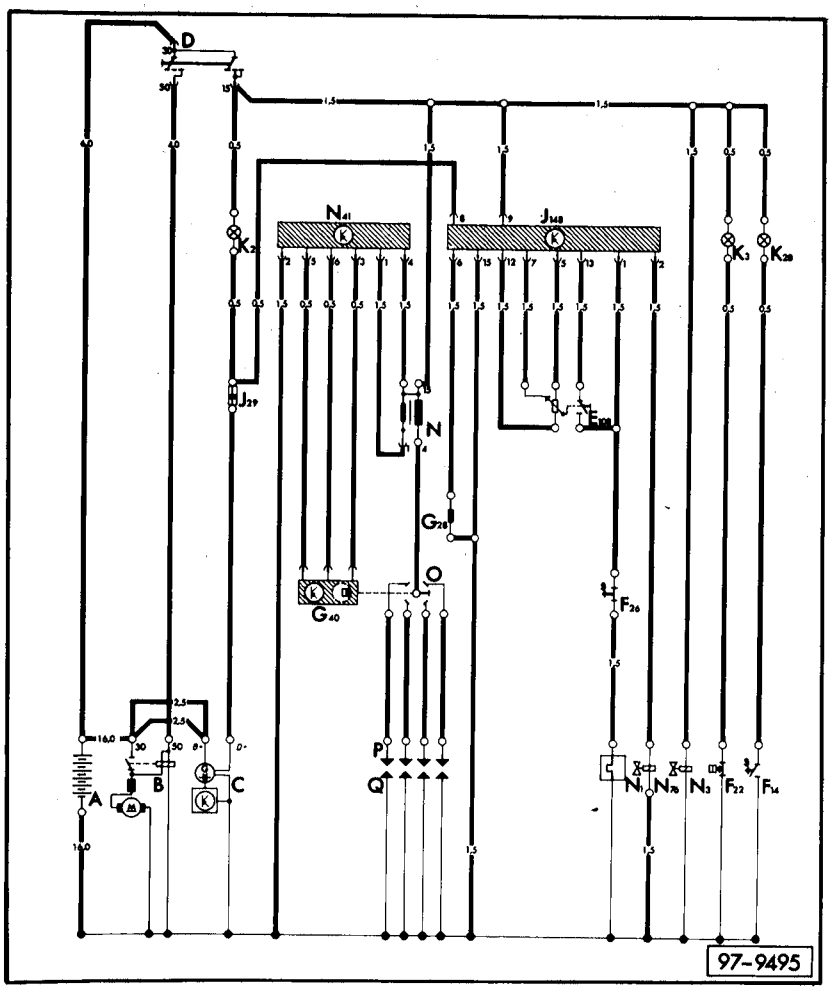

G28	–	**Engine speed sender**
G40	–	**Hall sender**
J29	–	**Blocking diode**
J148	–	**Engine speed regulator control unit**
K2	–	**Alternator warning lamp**
K3	–	**Oil pressure warning lamp**
K28	–	**Coolant temperature warning lamp**
N	–	**Ignition coil**
N1	–	**Carburettor automatic choke**
N3	–	**Bypass air cut-off valve**
N41	–	**TCI-H switch unit**
N76	–	**Lift magnet**
O	–	**Distributor**
P	–	**Spark plug connector**
Q	–	**Spark plugs**

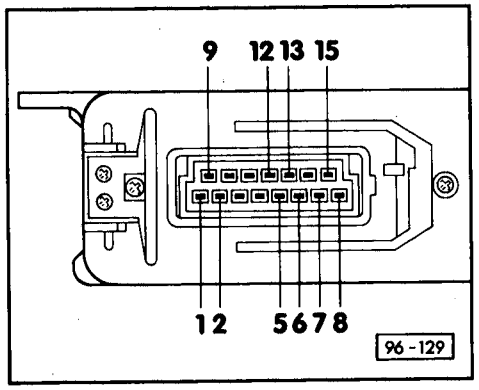

◄ Fig. 1 Control unit (J148) connector contact assignment

Testing alternator and voltage regulator

Checks with digital multimeter V.A.G 1315A

(45 A, 65 A alternator)

- V-belt tension, alternator security, wire routing and earth strap connections OK.

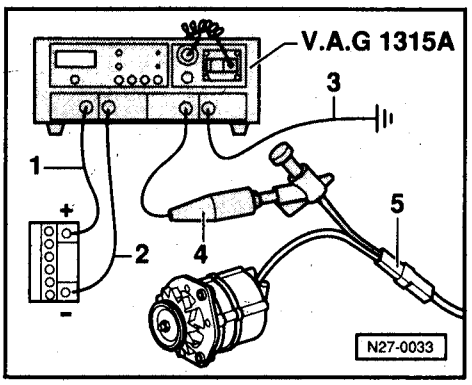

- Engine oil temperature at least 60 °C

◄ – Connect digital multimeter V.A.G 1315A:

1 - Red terminal to battery positive (+)

2 - Black terminal to battery negative (–)

3 - Black terminal to vehicle earth

4 - Red terminal to test probe

5 - Test probe to blue D+ wire on connector in engine compartment

– Operate button for alternator test.

Measuring voltage 8...12 Volt:

– Alternator defective (positive diode short circuit) renew diode plate.

Measuring voltage 0 Volt:

– Start engine and run at between 2000...3000 rpm. The red diode lighting up is of no consequence.

Green diode lights up:

Alternator OK.

Red diode lights up:

– Renew alternator voltage regulator first and then repeat measurement.

Green diode lights up:

Alternator OK voltage regulator was defective.

Red diode lights up:

– Alternator defective, check components and renew if necessary.

– Install old voltage regulator .

Checks with ballast resistance

(45 A, 65 A alternator)

- V-belt tension, alternator security, wire routing and earth strap connections OK.

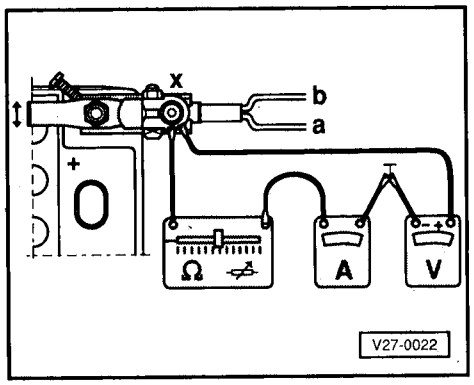

- Engine oil temperature at least 60 °C
- With ignition switched off, disconnect battery earthing strap.
- Disconnect positive terminal from battery positive terminal (+).
- Connect battery cut-out switch to battery positive (+) terminal.
- Connect the positive terminal to the battery cut-out switch.
- ◄ Connect ammeter, volt meter and ballast resistance as illustrated.
  a -To starter
  b -To relay plate terminal 30
  (wire fittment dependant on version)
  x - Battery cut-out switch
  A - Ammeter 0...100 amps
  V - Volt meter 0...30 volts
  Ω - Ballast resistance

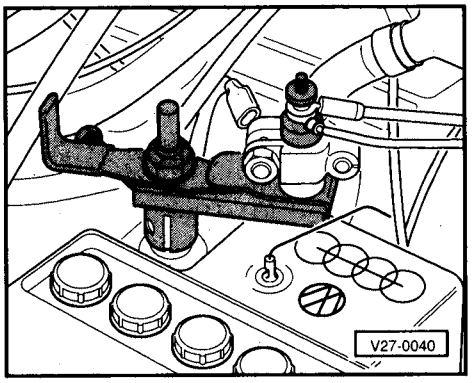

- ◄ Connect battery earthing strap, switch on battery cut-out switch.
- Start the engine and run at increased rpm.
- Set the ballast resistance so that the ammeter indicates about 20 amps.

- Open battery cut-out switch. (This separates the battery from the test circuit. The ballast current is now controlled only by the ballast resistor.)
- Regulate the ballast resistance until ammeter indicates
  30 Amps for 45 A alternator.
  45 Amps for 65 A alternator.
- Read off voltage on the voltmeter,
  Specification: 12.5...14.5 V
- If specifications are not attained, change alternator voltage regulator first and then repeat measurement.

Specifications are attained:

Alternator OK. voltage regulator was defective.

Specifications were not attained.

- Alternator defective. Check components, renew if necessary.
- Install old regulator again.

Checking starter

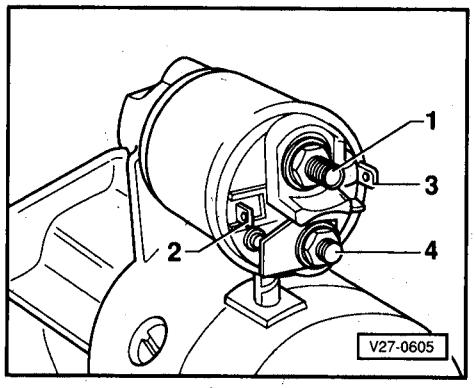

Cable connections to solenoid switch

◄ 1 - Terminal 30 - from battery (+)
2 - Terminal 50 - from ignition/starter switch
3 - Connection for field winding

Starter does not turn

- Battery charged
- Cable connections to solenoid switch and earth strap between engine, starter motor and the battery must be tight and must not be oxidised

Note:

Measure all voltages with voltmeter, e.g. V.A.G. 1315A or V.A.G. 1526.

- Measure voltage at starter solenoid switch -3- terminal 50.
  12 V version:
  Specification at least 8 V
- If the specified value is attained, measure voltage at the solenoid switch connection to the field winding -4-. (Ensure there is a good contact.)

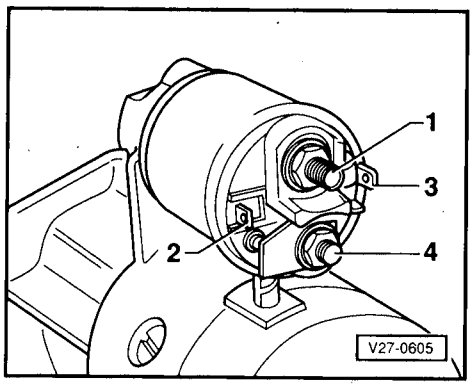

- If there is a voltage of (at least 8 V) present, service starter.
- Otherwise, renew solenoid switch.

◄ - If specification is not attained at solenoid switch -3- terminal 50, measure the voltage at ignition/starter switch terminal 50.

- If a voltage of (at least 8 V) is present, repair open circuit between the ignition/starter switch terminal 50 and starter terminal 50 (cable routing ⇒ Page 22-53, Current flow diagram).

- Otherwise, renew ignition/starter switch.

Starter turns too slowly and does not crank engine

- Engine filled with oil appropriate to ambient temperatures during the winter season.
- V-belt tension OK.
- Battery charged
- Cable connections to battery OK. (no voltage loss due to loose or oxidised connections)
  - Operate starter.

- If starter does not crank the engine, disconnect the battery earth strap.

- Clean and tighten connections to starter and earth strap (between engine and unit). (Do not loosen earth strap on unit.)

- Connect battery earth strap.

- Operate starter.

- If the starter does not crank the engine, the following faults may be present:

♦ Insufficient contact between the carbon brushes and the commutator

- Renew the carbon brushes and clean carbon brush guides.

♦ Commutator scored, burnt or soiled

- Renew armature.

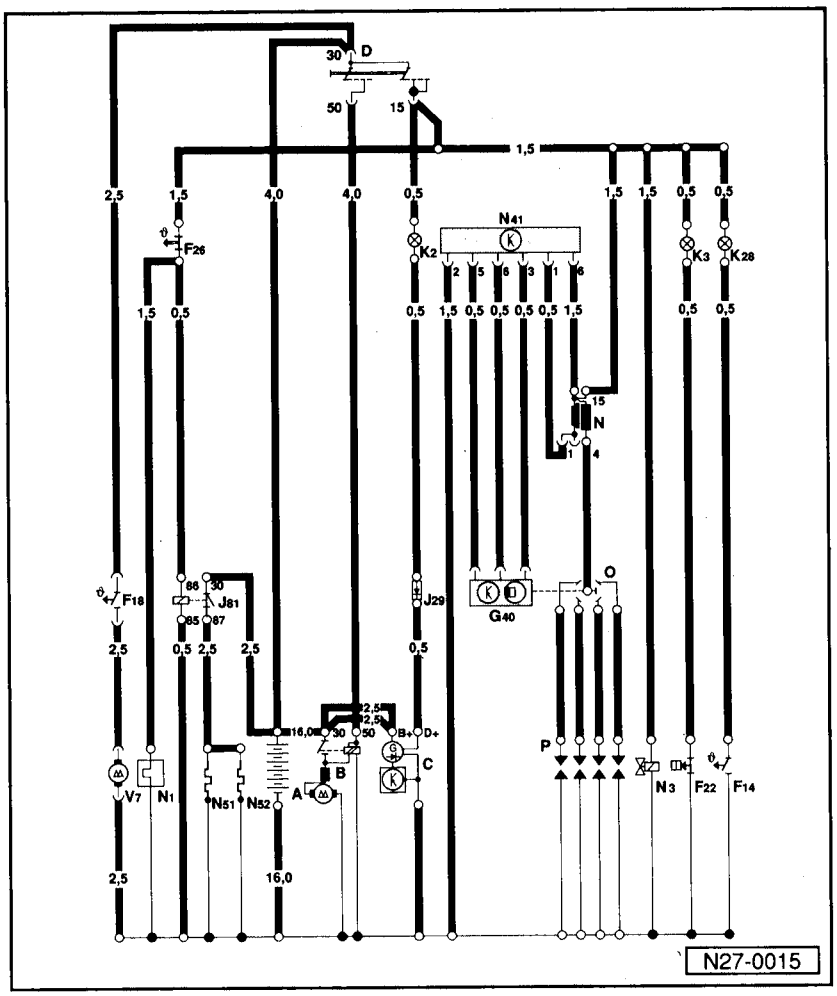

Current flow diagram

Note:

The wiring cross-sections given are minimum sizes. Some units have larger sizes and these should be noted when carrying out repairs.

A - Battery

B - Starter

C - Alternator

D - Ignition/starter switch

F14 - Coolant temperature warning switch (110° C)

F18 - Fan and coolant thermoswitch

F22 - Oil pressure switch (0.3 bar)

F26 - Automatic choke thermoswitch

G40 - Hall sender

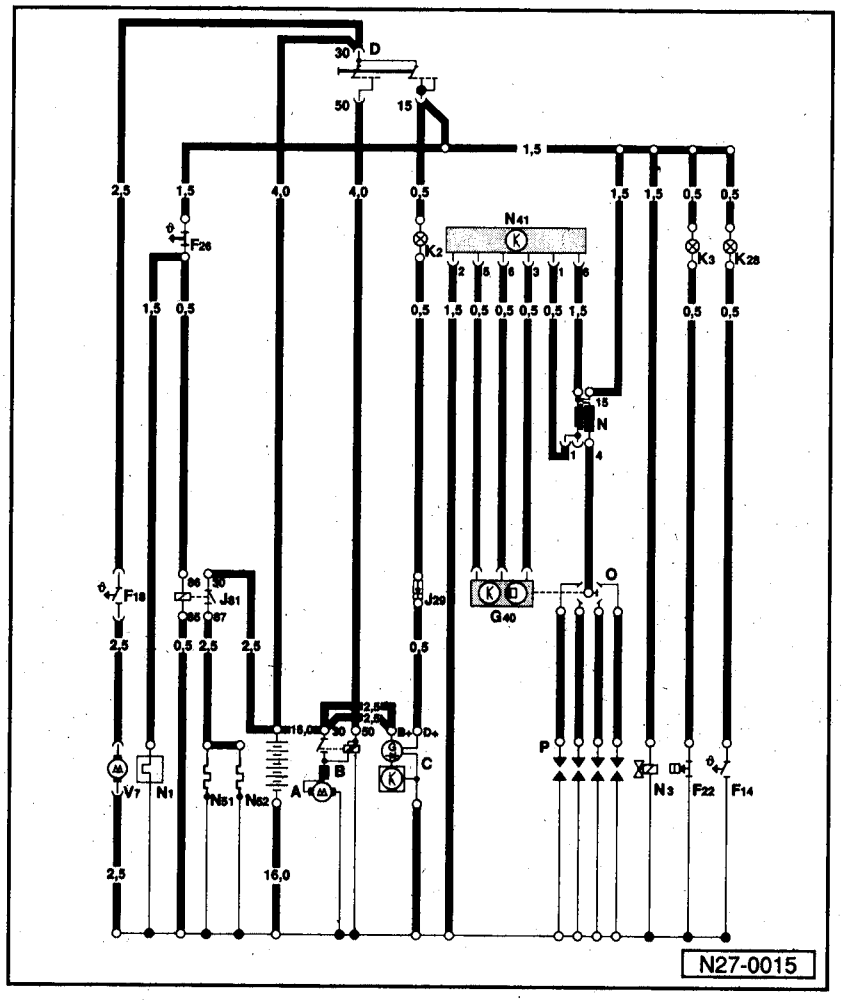

J29 - Blocking diode

J81 - Intake manifold pre-heating relay

K2 - Alternator warning lamp

K3 - Oil pressure warning lamp

K28 - Coolant temperature warning lamp

N - Ignition coil

N1 - Carburettor automatic choke

N3 - By-pass air cut-off valve

N41 - TCI-H switch unit

N51 - Intake manifold pre-heating heater element

N52 - Carburettor part throttle channel heating heater element

O - Distributor

P - Spark plug connector

V7 - Radiator fan

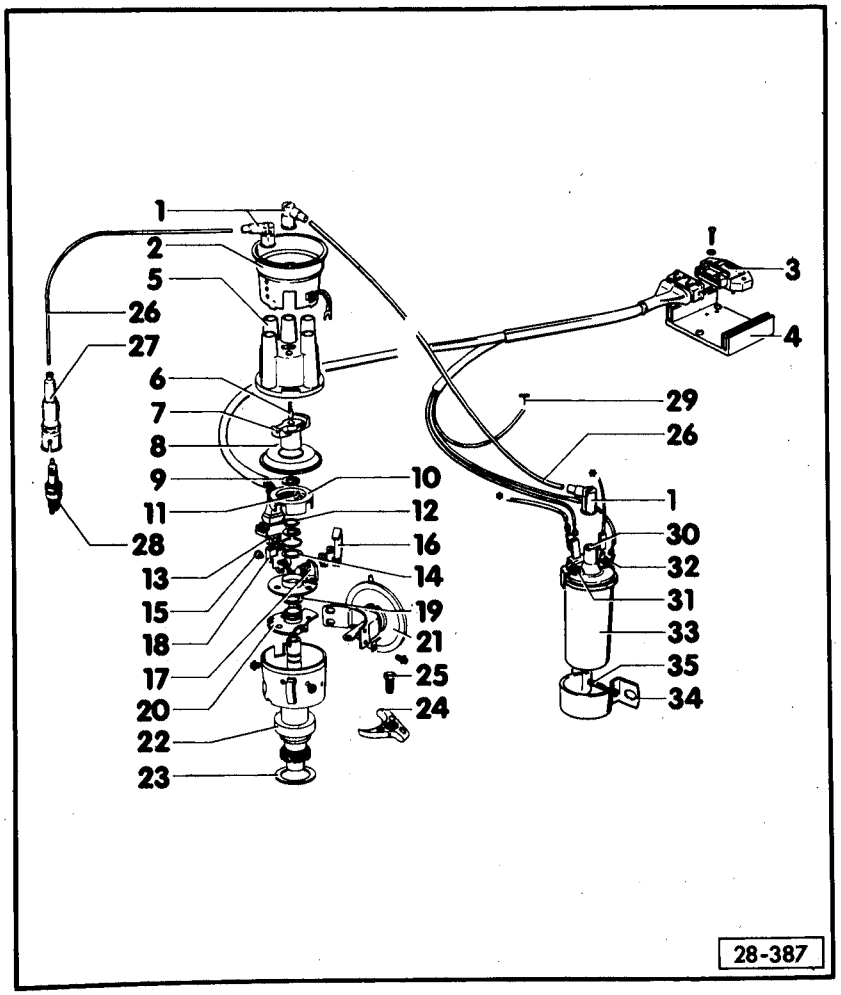

Servicing TCI-H ignition system

Safety precautions
⇒ Page 28-7

Adjustment data, spark plugs
⇒ Page 28-8

Distributor data
⇒ Page 28-10

Checking and adjusting ignition timing
⇒ Page 28-13

Checking speed limiter for electronic speed regulator
⇒ Page 28-8

1 - **Suppressed connector**
- 0.6...1.4 kΩ

2 - **Screening cap**
- For radio suppression

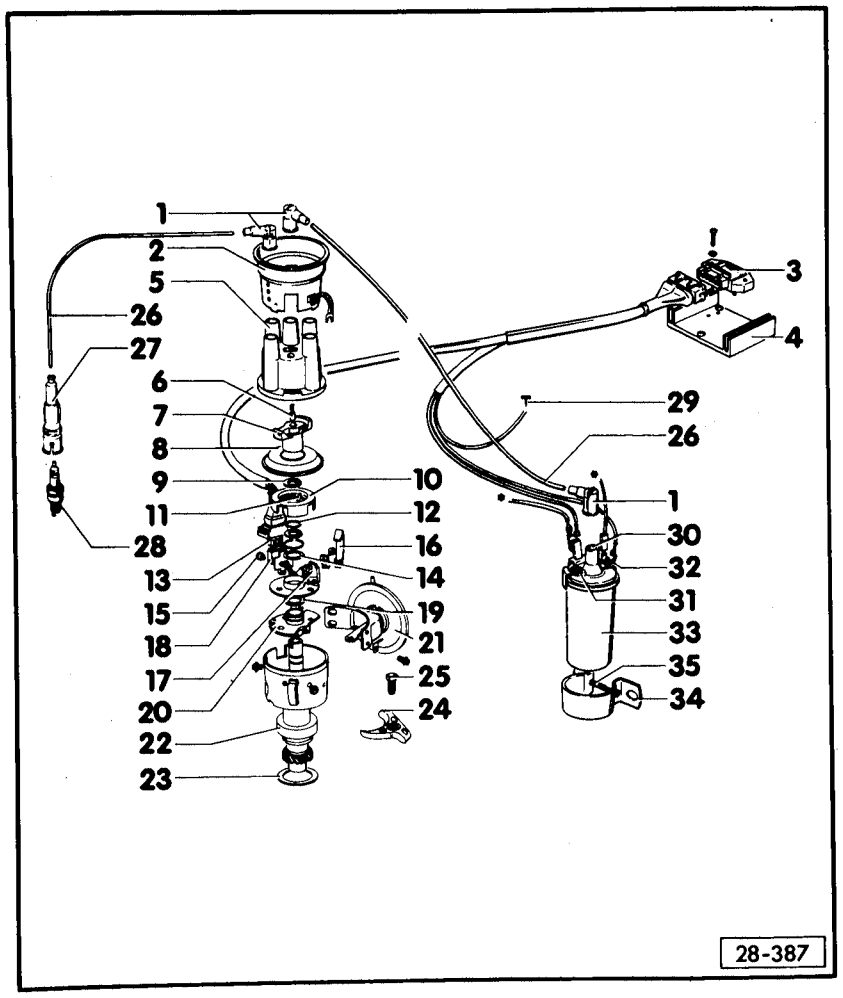

3 - **TCI-H switch unit (N141)**
- Checking ⇒ Page 28-19

4 - **Heat sink**

5 - **Distributor cap**
- Check for cracks and for signs of tracking
- Check contact wear
- Clean before fitting
- Before removing, detach screening cap earth wire

6 - **Carbon brush with spring**
- Check for wear, damage and ease of movement

7 - **Rotor arm**
- Designation: R1
- 0.6...1.4 kΩ
- Checking governor ⇒ Page 28-23

8 - **Dust cap**

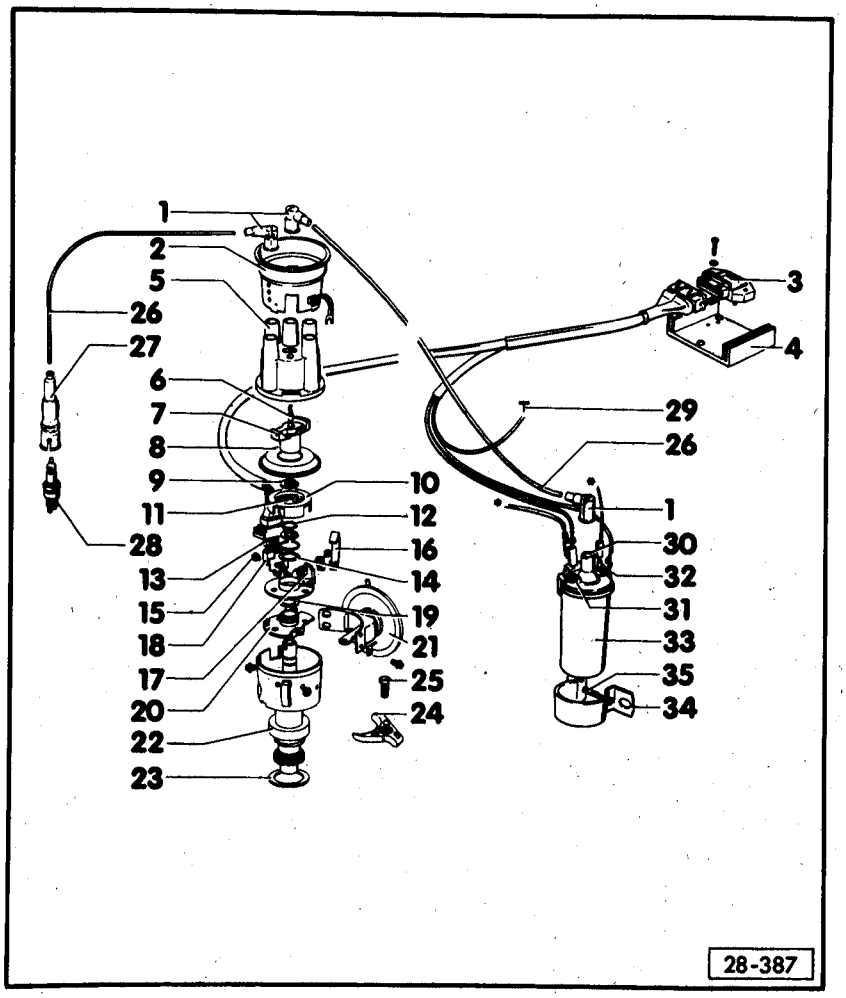

9 - **Securing ring**

10 - **Rotor cover**
- Removing and installing ⇒ Page 28-11, fig 1
- After installing check for ease of movement

11 - **Locking pin**

12 - **Spring washer (s)**

13 - **Connector**

14 - **Washer (s)**

15 - **Retainer knob**

16 - **Clip**
- Must not lie inwards when dust cap is removed (danger of damage to rotor)

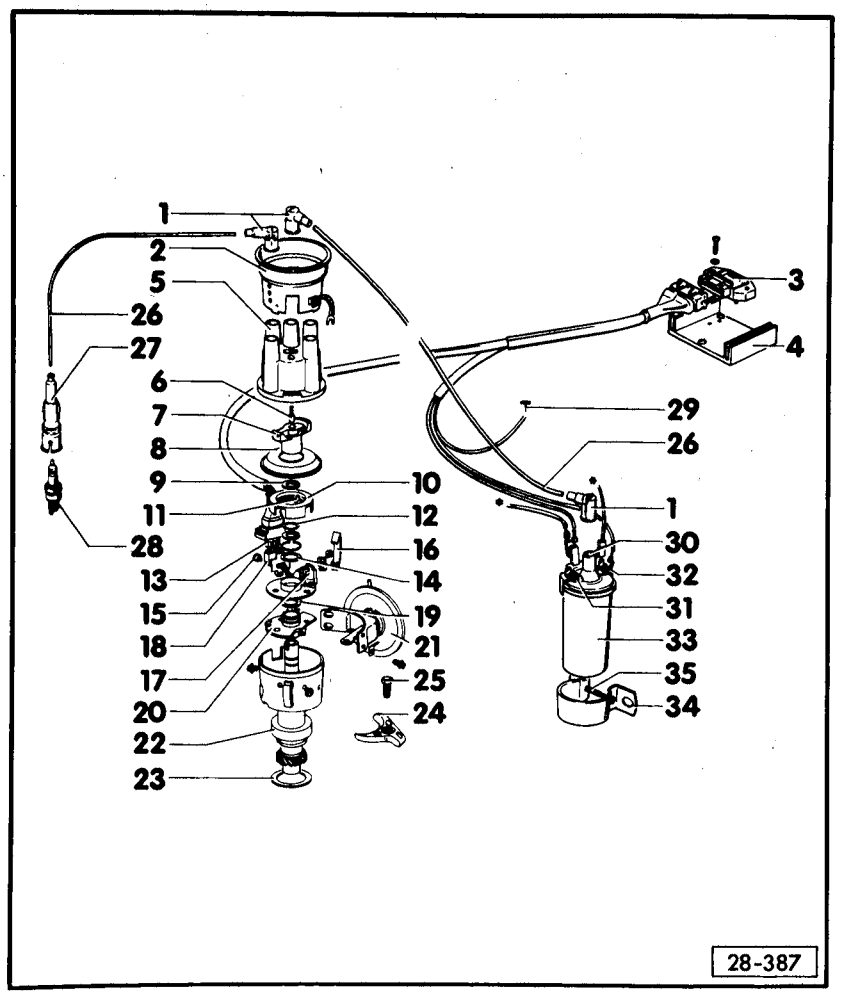

17 - **Hall sender (G40)**
- Checking ⇒ Page 28-22
- Grease bearing surfaces lightly

18 - **Connector**

19 - **Washer**

20 - **Base plate**

21 - **Vacuum unit**
- Check for leaks ⇒ Page 28-16
- Checking vacuum advance ⇒ Page 28-17

22 - **Distributor**
- Installing ⇒ Page 28-11
- Checking and adjusting ⇒ Page 28-13
- Checking ignition timing ⇒ Page 28-14

23 - **Gasket or O-ring**
- Renew gasket

24 - **Clamp**

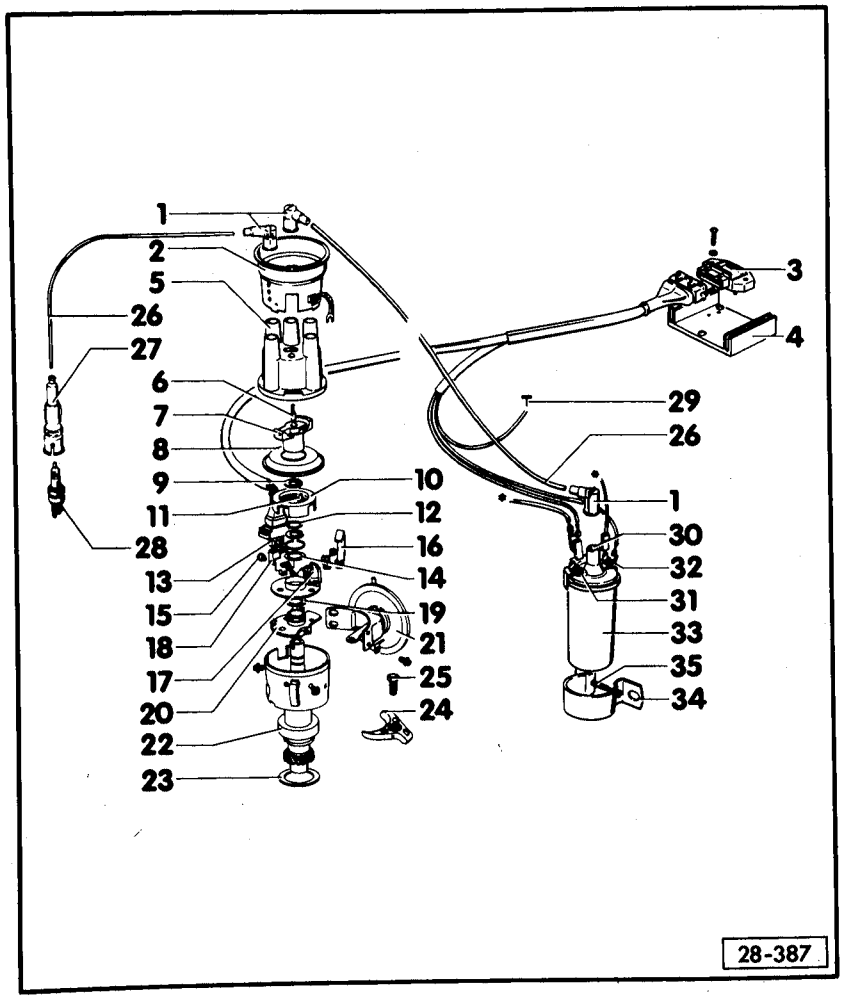

25 - **20 Nm**

26 - **Ignition (HT) lead**
♦ Check for continuity

27 - **Spark plug connector**
♦ 4...6 kΩ

28 - **Spark plug, 25 Nm**
♦ Type and electrode gap
⇒ Page 28-8

29 - **Contact on battery minus terminal**

30 - **Terminal 4**

31 - **Terminal 1 (–)**

32 - **Terminal 15 (+)**

33 - **Ignition coil**
♦ Primary resistance
0.52...0.76 Ω
(between terminals 1 and 15)
♦ Secondary resistance
2.4...3.5 kΩ
(between terminals 4 and 15)

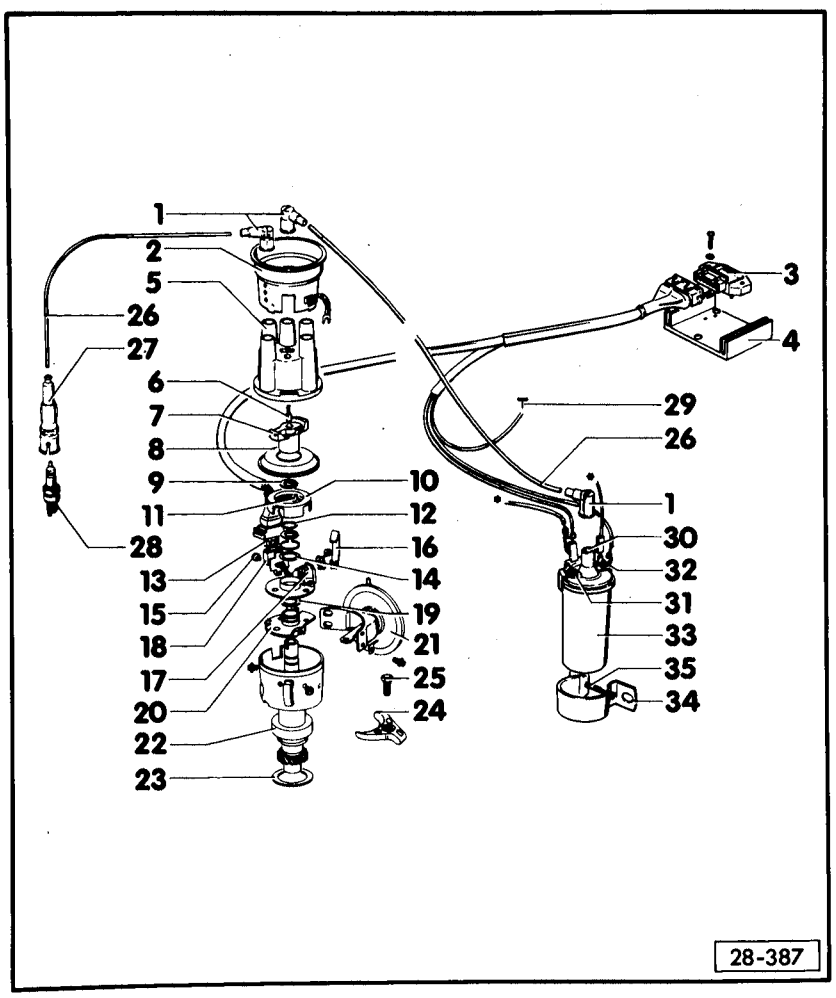

34 - **Retaining clamp**

35 - **8 Nm**

Safety precautions

In order to avoid injuries to persons and/or damage to the ignition system, the following rules must be observed:

- Do not touch or pull off wiring when engine is running or turning over at starter speed.
- Only connect or disconnect ignition system wiring (also tester unit wiring) when ignition is switched off.
- When the engine is to be turned over at starter speed without starting e.g. when checking compressions, pull connector off Hall sender (distributor).
- Do not connect a condenser to terminal 1 (–).
- Do not exchange rotor arm 1 kΩ (designation: R1) for another, even for radio interference suppression.
- For suppression, only use a 1 kΩ resistance on high tension (HT) leads and a 5 kΩ resistance on spark plug connectors.

Adjustment data, spark plugs

Engine code	026.2, 01.84➤ ADF
Ignition timing	
Adjustment figures	9 ± 1° BTDC
Speed	700...800 rpm
Vacuum hose	pulled off
Firing order	1-3-4-2
Spark plugs [1]	
VW/Audi	101 000 005 AB [1] 101 000 001 AC [1] 101 000 007 AB [1]

Engine code	026.2, 01.84➢ ADF
Manufactures designation	W 7 DTC [1] 14-7 DTU [1] N 7 BYC [1] W 7 D, W 7 DC 14-7 D, 14-7-DU, RS 35, N 8 Y, N 7 YC, (W 8 D, W 8 DC, 14-8D, 14-8 DU, N 10 Y, N 9 YC) [2]
Electrode gap	0.9...1.1 mm (0.7...0.9 mm) [3]
Tightening torque	25 Nm

[1] When using spark plugs with three (3) earth electrodes the changing intervals can be extended to 300 operating hours (30,000 km).
[2] When mainly travelling short distances.
[3] For spark plugs with three (3) earth electrodes.

Distributor data

Engine code		026.2 01.84➢ ADF
Distributor		
Part no		026 905 205 G
Centrifugal advance		
begins	rpm	850...1200
	rpm	1600
	degrees	4...8
ends	rpm	4500
	degrees	27...31
Vacuum advance		
begins	mbar	160...200
	mmHg	(120...150)
ends	mbar	310
	mmHg	(230)
	Grad	13...17

[1] Speed details = Engine speed

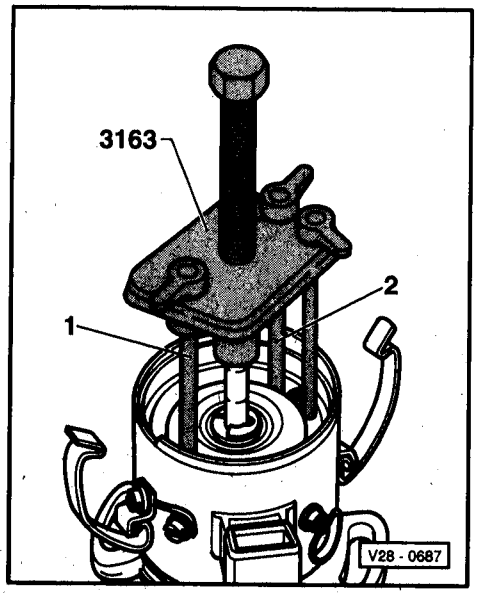

◄ **Fig. 1 Removing and installing rotor cover**

– Insert puller hooks -1- and -2- as illustrated and pull off cover.

Note:

- *When pulling cover off ensure that securing pin does not fall into distributor.*
- *After installing cover, check for freedom of movement by turning distributor shaft.*

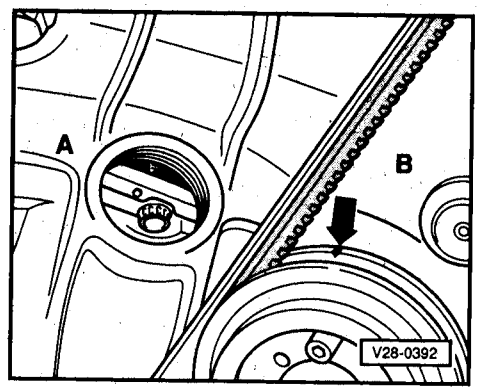

Installing distributor

◄ Engine installed

– Set flywheel or drive plate to TDC No 1 cylinder -A-.

Engine removed

– Set vibration damper (belt pulley) to TDC No 1 cylinder -B-.

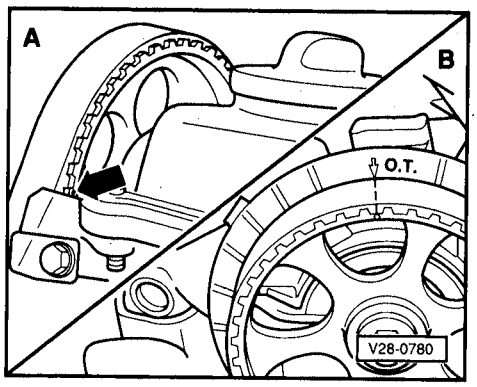

Version A

◄ Mark on camshaft sprocket must align with cylinder head cover -arrow-.

Version B

Mark on camshaft sprocket must align with arrow on toothed belt guard.

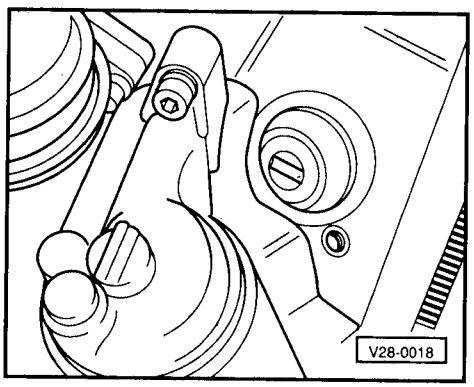

◄ Set oil pump drive tab parallel with crankshaft.

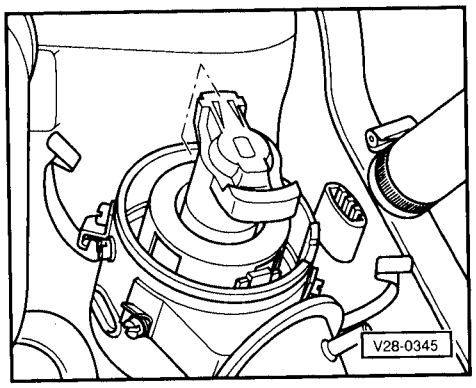

◄ – Insert distributor so that the rotor arm points towards the No 1 cylinder mark on the distributor housing.

– Clean distributor cap and check for cracks as well as signs of tracking before fitting. Renew cap if necessary.

– Check ignition timing and if necessary adjust ⇒ Page 28-13.

Checking and adjusting ignition timing

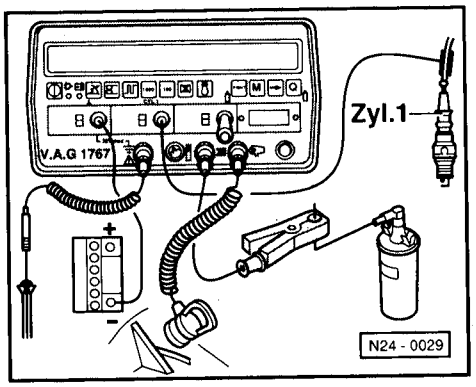

- Engine oil temperature at least 60 °C
- Vacuum hose pulled off.

◄ – Connect ignition tester V.A.G 1367 with pick-up clamp V.A.G 1367/8 or ignition tester V.A.G 1767.

– Start engine and allow to run at idling speed.

– Check ignition timing.

Checking with TDC sender

The ignition timing is shown directly on the tester.

Specified: 9 ± 1° BTDC.

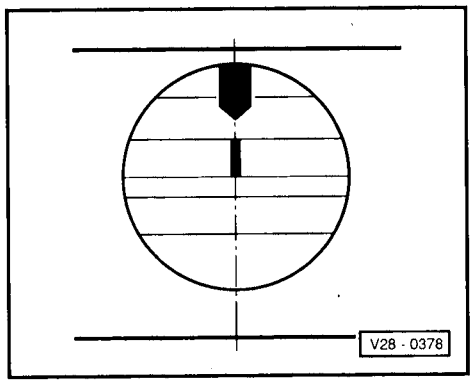

◄ – Direct flashes at ignition timing mark.

– Ignition timing mark must be in line with reference mark on clutch housing.

– Adjust ignition timing by turning distributor if necessary.

– Correct idling speed if necessary.

Checking ignition timing setting

- Engine oil temperature at least 60 °C

Checking centrifugal advance with TDC sender.

Checking centrifugal advance with stroboscope ⇒ Page 28-15.

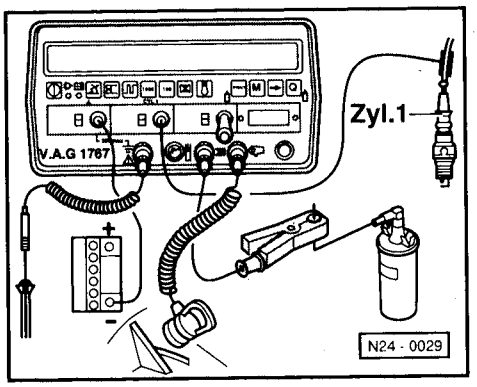

◄ – Connect ignition tester V.A.G 1367 with pick-up clamp V.A.G 1367/8 or ignition tester V.A.G 1767.

– Start engine and allow to run at idling speed.

– Pull off vacuum hose from vacuum unit on distributor.

– Indicated ignition timing point = basic value.

– Increase speed slowly. Start of advance is indicated by movement of mark towards higher degrees.

- Compare speed with value given for "start of advance".
- Increase engine speed to next test speed.
- Read off advance value on tester.
- Calculate advance values as follows:

	Advanced angle reading
–	Basic value
=	Centrifugal advance angle

- Calculating centrifugal advance value.
- Repeat checks at other speeds.

Checking centrifugal advance change with stroboscope.

- Connect speed test unit and stroboscope.
- Start engine and run at idling speed.
- Check ignition timing point and adjust.
- Pull vacuum hose off vacuum advance unit.
- Flash ignition timing mark.
- Note indicated angle = basic value

- Increase speed slowly. Start of advance is shown by the mark moving
- Compare speed with value given for "start of advance".
- Increase engine speed to next test speed. "Bring mark back" until timing mark and reference mark on clutch housing align.
- Read off advance value.
- Calculate centrifugal advance values as follows:

	Advanced angle reading
–	Basic value
=	Centrifugal advance angle

- Compare calculated centrifugal advance value with specification.
- Repeat checks at other speeds.

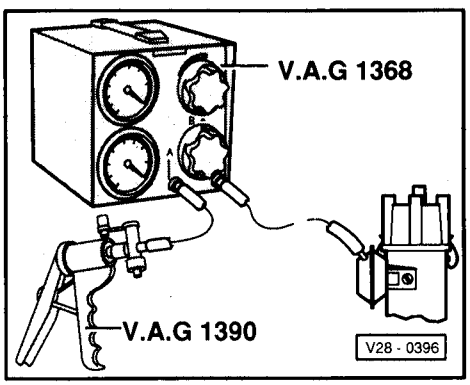

Checking vacuum advance unit for leaks

◄ - Connect vacuum test unit V.A.G 1368 with hand vacuum pump V.A.G 1390 to vacuum advance unit.
- Switch test unit to through flow.

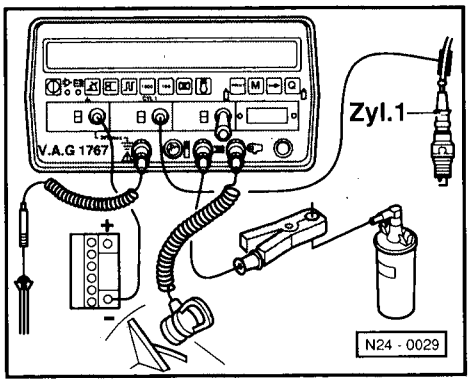

- Using vacuum pump create a vacuum of approx. 500 mbar.
- Switch test unit so that the vacuum is held on vacuum unit side.
- Set vacuum to 450 mbar on test unit. The vacuum must not drop by more than 10 % in one minute.

Checking vacuum advance

◄ - Connect ignition test unit V.A.G 1367 with pick-up clamp V.A.G 1367/8 or ignition test unit V.A.G 1767.

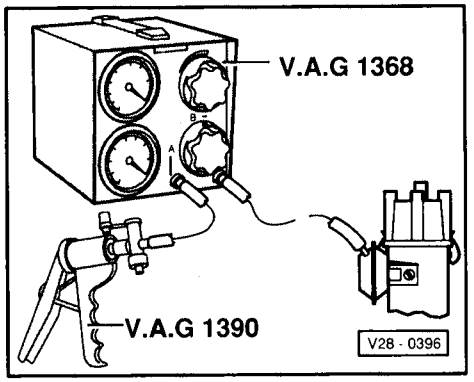

◄ - Connect vacuum test unit V.A.G. 1368 with hand pump V.A.G. 1390 to vacuum advance unit.
- Switch test unit to through flow.
- Start engine and run at idling speed.

Checking with TDC sender

Checks with stroboscope ⇒ Page 28-18.

- Note indicated angle = basic value

- Create a vacuum slowly using vacuum pump until the ignition timing starts to move towards "Advanced".
- Read off vacuum reading and compare with test value.
- Increase vacuum further until test value "end of adjustment".
- Lower engine speed to idling speed if necessary.
- Calculate vacuum advance value as follows:

	Advanced angle reading
–	Basic value
=	Vacuum advance angle

- Compare calculated vacuum advance value with specification.
- Increase vacuum further the ignition timing point must not change.

Checking with stroboscope

- Direct flashes at ignition timing marks.
- Note indicated angle = basic value
- Create a vacuum slowly using hand vacuum pump until ignition timing point starts to move towards "Advanced".

- Read off vacuum value and compare with test value.
- Increase vacuum further until test value "end of adjustment ".
- Lower engine speed to idling speed if necessary.
- "Bring mark back " until timing mark and reference mark on clutch housing align.
- Calculate vacuum advance value as follows:

	Advanced angle reading
–	Basic value
=	Vacuum advance angle

- Compare calculated vacuum advance value with specification.
- Increase vacuum further the ignition timing point must not change.

Checking TCI-H switch unit

Checking with TCI-H test unit V.A.G 1451

- Perform checks according to instructions in Instruction Manual.

Check with multimeter V.A.G 1526 or V.A.G 1715.

Note:

- *The prescribed temperatures are valid for ambient temperatures from 0 up to + 40 °C.*
- *If the measured values deviate from specifications then before renewing components, check wiring according to current flow diagram.*
- *Use auxiliary leads from V.A.G 1594 to connect test units.*

> ***Attention!***
>
> ***To prevent electronic components from being destroyed, select voltage measuring scale -V-, before connecting measuring leads.***

- Ignition coil OK.
- Pull connector off TCI-H switch unit.

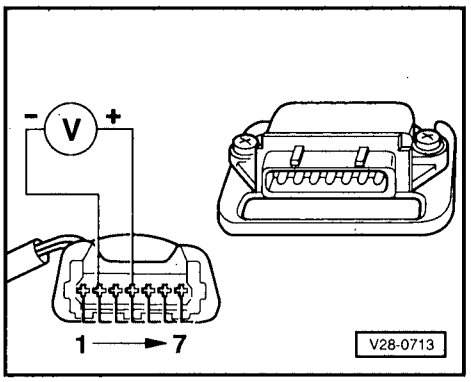

- Connect multimeter to connector contacts 2 and 4 using aux. leads from V.A.G 1594.
- Switch on ignition.
  Specification: approx. battery voltage.
- Reconnect connector to TCI-H switch unit.
- Switch off ignition

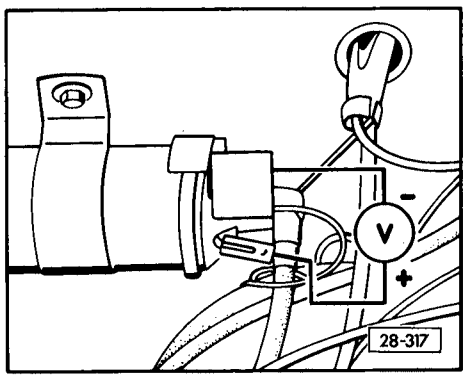

- Pull connector off Hall sender (G40 in distributor).

◄ - Connect multimeter to ignition coil terminals 1 (–) and 15 (+) using aux. leads from V.A.G. 1594.

- Switch on ignition.
  Specification:
  at least 2 V, but must after
  1...2 seconds drop to 0 V.

If the voltage does not drop to 0 V:

- *Renew TIC-H switch unit and check ignition coil for leakage of insulation compound, renew also if necessary.*

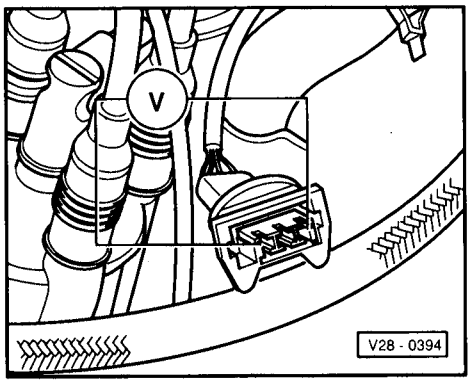

- Briefly touch centre Hall sender connector contact to earth using auxiliary leads from V.A.G 1594. The voltage value must briefly rise to at least 2 V.

- Switch off ignition.

◄ - Connect multimeter to connector outer contacts using aux. leads from V.A.G. 1594.

- Switch ignition on.
  Specification: at least 5 V.

If the specification is not achieved:

- Check wiring for open circuit according to current flow diagram, renew TCI-H switch unit if necessary.

Checking Hall sender

- Ignition coil OK.
- TCI-H switch unit OK.
- Wiring between Hall sender and TCI-H switch unit OK.

- Pull high tension wire terminal 4 out from distributor and lay to earth using auxiliary leads from V.A.G 1594.

- Pull rubber grommet/cover off connector on TCI-H switch unit (connector remains connected).

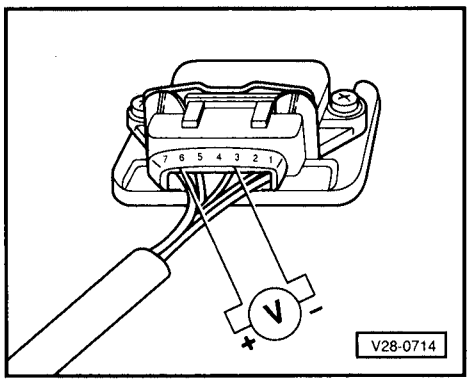

◄ - Connect multimeter to contacts 3 and 6 using aux. leads from V.A.G 1594.

- Switch on ignition.

- Turn engine slowly by hand, in engine direction of rotation, whilst observing multimeter display.
  Specification:
  Alternating from between 0 and at least 2 V.

If the specification is not achieved:

- Renew Hall sender ⇒ Page 28-4, item 17

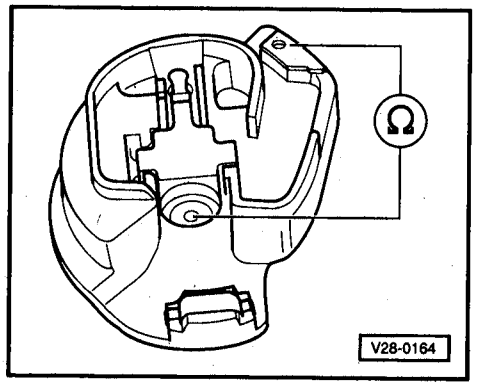

Checking speed limiter

◄ – Connect multimeter V.A.G 1526 to measure resistance on speed limiter contacts using aux. leads from V.A.G 1594.
Specification: 4...6 kΩ

If the specification is not achieved:

– Renew speed limiter.

Checking regulated speed

– Disconnect lift magnet rods.
– Read off regulated speed on speed limiter.
– Start engine and increase engine speed until the speed limiter cuts-in (regulated).
– Compare regulated speed with "lead speed" (± 100 rpm), renew speed limiter if necessary.

Note:

When combining the speed limiter with the electronic speed regulator, the speed limiter's regulating speed must be 400 rpm above the maximum set regulating speed of the electronic speed regulator, when not under load.